FED. ROAD DIV. No.	STATE	SEC. AND JOB No.	FISCAL YEAR	SHEET No.	TOTAL SHEETS
3	FLA.	07580-2150		1	

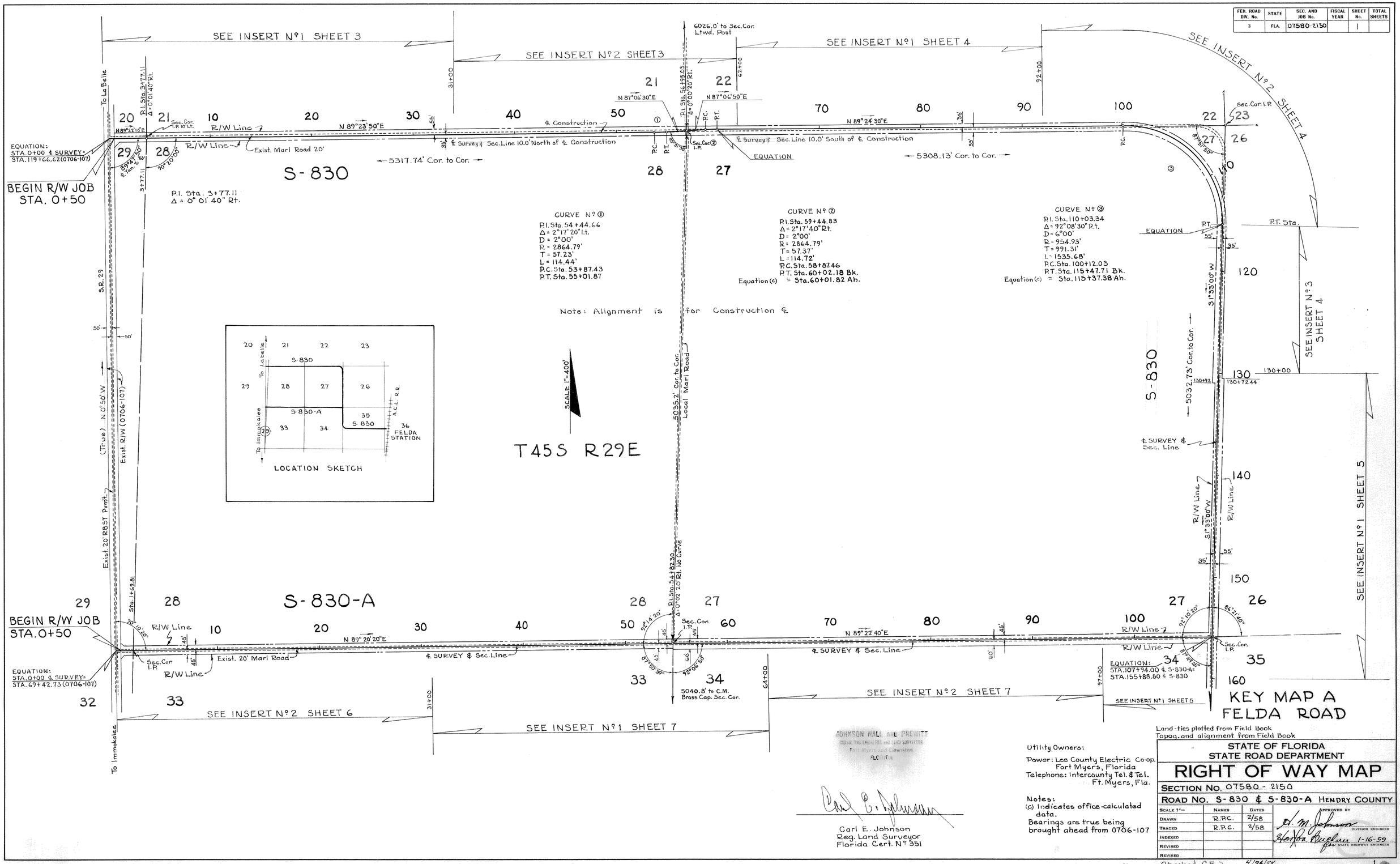

Land-ties plotted from Field Book
Topog. and alignment from Field Book

JOHNSON HALL AND PREWITT
CONSULTING ENGINEERS and LAND SURVEYORS
Fort Myers and Clewiston
FLORIDA

Carl E. Johnson
Reg. Land Surveyor
Florida Cert. Nº 351

Utility Owners:
Power: Lee County Electric Co-op. Fort Myers, Florida
Telephone: Intercounty Tel. & Tel. Ft. Myers, Fla.

Notes:
(c) Indicates office-calculated data.
Bearings are true being brought ahead from 0706-107

STATE OF FLORIDA
STATE ROAD DEPARTMENT

RIGHT OF WAY MAP

SECTION No. 07580 - 2150

ROAD No. S-830 & S-830-A HENDRY COUNTY

SCALE 1"=	NAMES	DATES	APPROVED BY
DRAWN	R.P.C.	2/58	H. M. Johnson DIVISION ENGINEER
TRACED	R.P.C.	2/58	Horton Bugham 1-16-59 for STATE HIGHWAY ENGINEER
INDEXED			
REVISED			
REVISED			

Checked C.E.S. 4/26/58

INDEXED JAN 20 1959

FED. ROAD DIV. No.	STATE	SEC. AND JOB No.	FISCAL YEAR	SHEET No.	TOTAL SHEETS
3	FLA.	07580-2150		2	

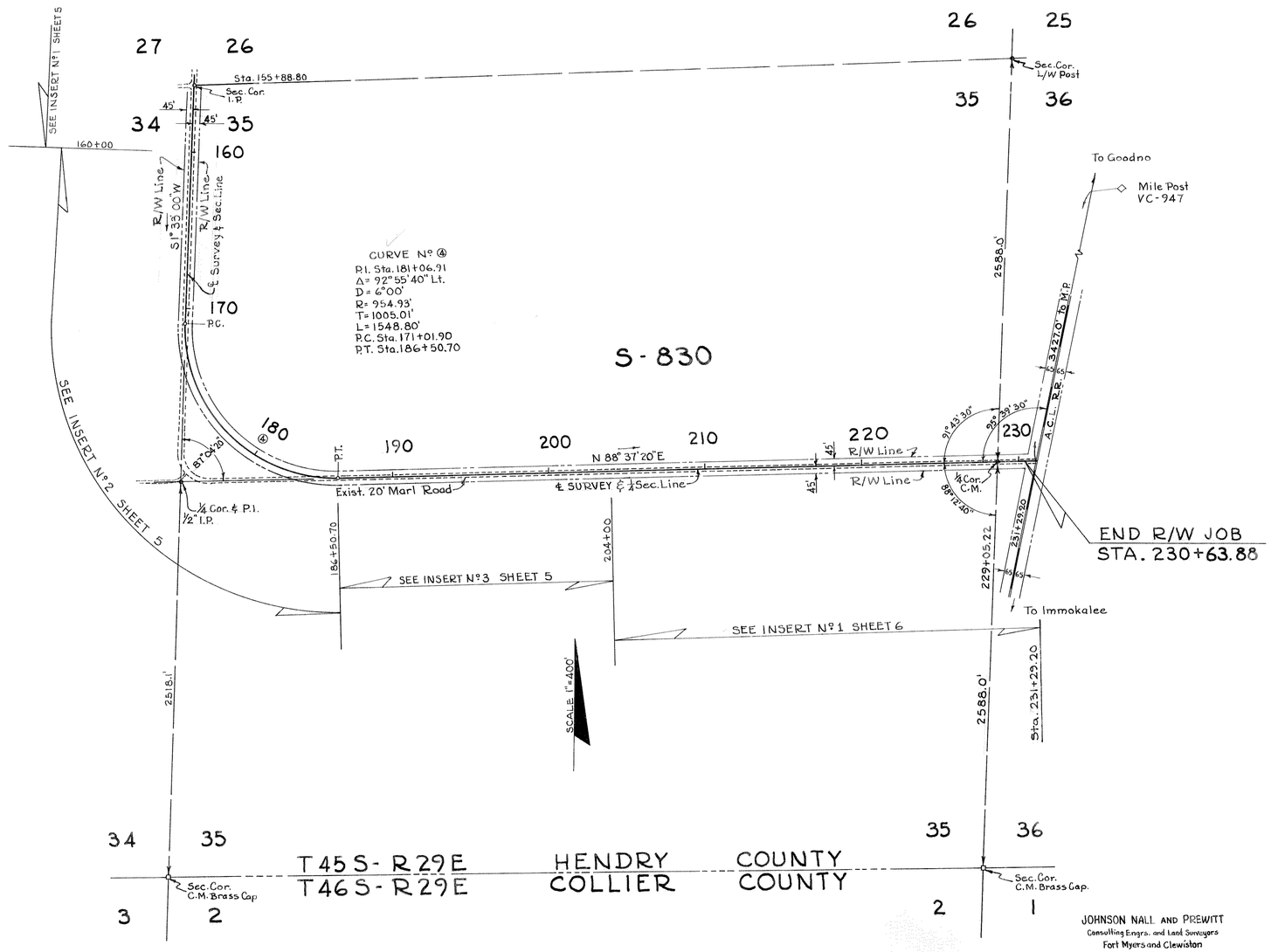

KEY MAP B
FELDA ROAD

JOHNSON NALL AND PREWITT
Consulting Engrs. and Land Surveyors
Fort Myers and Clewiston
FLORIDA

Carl E. Johnson
Reg. Land Surveyor
Florida Cert. Nº 351

STATE OF FLORIDA
STATE ROAD DEPARTMENT

RIGHT OF WAY MAP

SECTION No. 07580 - 2150

ROAD No. S-830 & S-830-A HENDRY COUNTY

SCALE 1"=	NAMES	DATES
DRAWN	R.P.C.	2/58
TRACED	R.P.C.	2/58
INDEXED		
REVISED		
REVISED		

APPROVED BY
E. M. Johnson
DIVISION ENGINEER
Florida Bucher 1-16-59
for STATE HIGHWAY ENGINEER

Checked C.E.J. 4/26/58

INDEXED
JAN 20 1959

2

DOSWELL, JACKSONVILLE

FED. ROAD DIV. No.	STATE	SEC. AND JOB No.	FISCAL YEAR	SHEET No.	TOTAL SHEETS
3	FLA.	07580-2150		3	

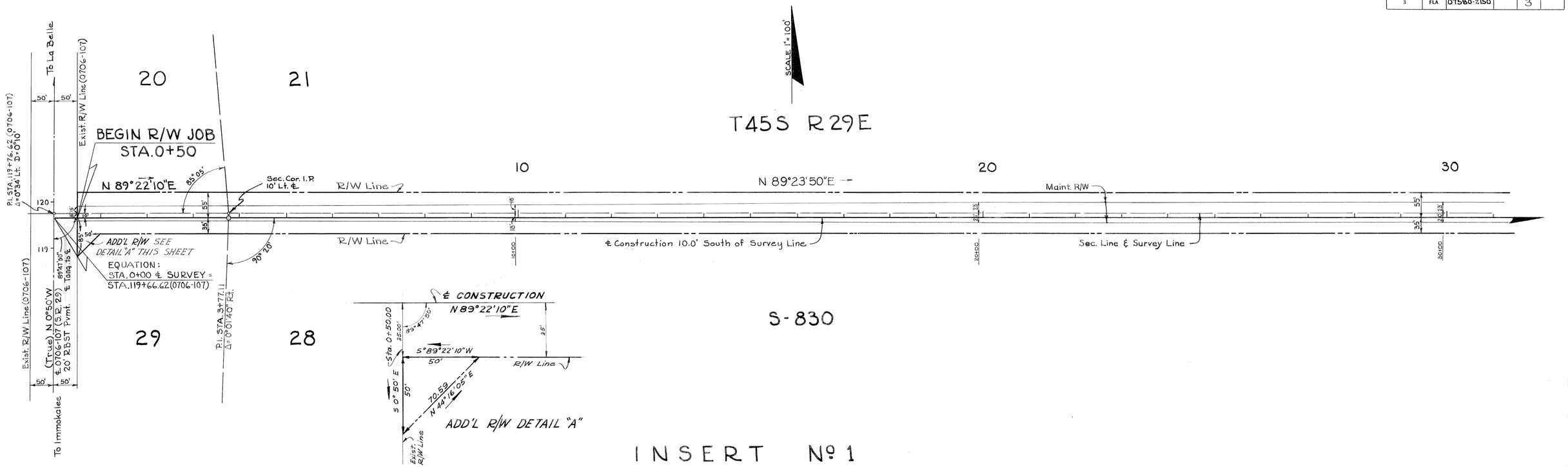

INSERT Nº 1

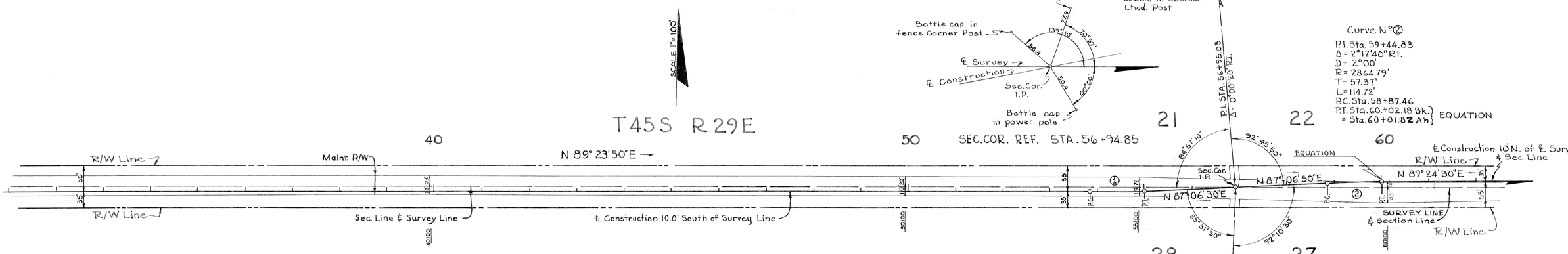

S-830

INSERT Nº 2

Carl E. Johnson
Reg. Land Surveyor
Florida Cert. Nº 351

INSERTS
FELDA ROAD

STATE OF FLORIDA
STATE ROAD DEPARTMENT

RIGHT OF WAY MAP

SECTION NO. 07580 - 2150

ROAD NO. S-830 HENDRY COUNTY

	NAMES	DATES
SCALE 1"=		
DRAWN	R.P.C.	3/58
TRACED	R.P.C.	3/58
INDEXED		
REVISED		
REVISED		

APPROVED BY
D. M. Johnson DIVISION ENGINEER
Hopkins Duncan 1-16-59 for STATE HIGHWAY ENGINEER

INDEXED Checked D.E.J. 4/24/58
JAN 20 1959

FED. ROAD DIV. No.	STATE	SEC. AND JOB No.	FISCAL YEAR	SHEET No.	TOTAL SHEETS
3	FLA.	07580-2150		4	

SCALE 1"=100'

T45S R29E

Sec. 22

70 80 90

S-830

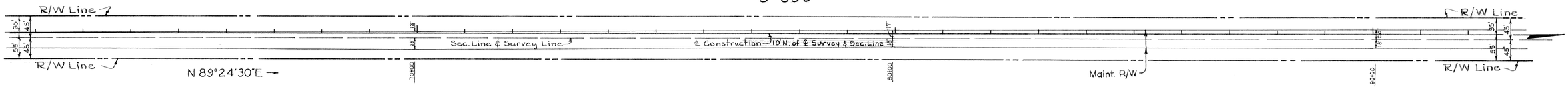

Sec. 27

INSERT Nº 1

S-830

100

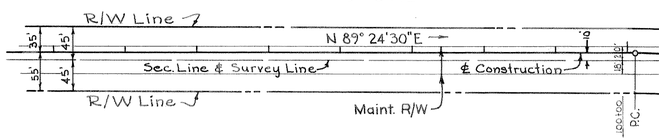

INSERT Nº 2

Sec. 26

120 130

S-830

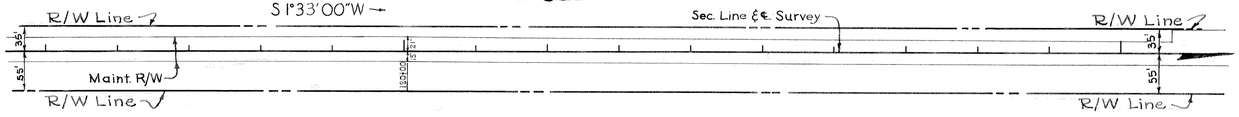

Sec. 27

T45S R29E

SCALE 1"=100'

INSERT Nº 3

22 23

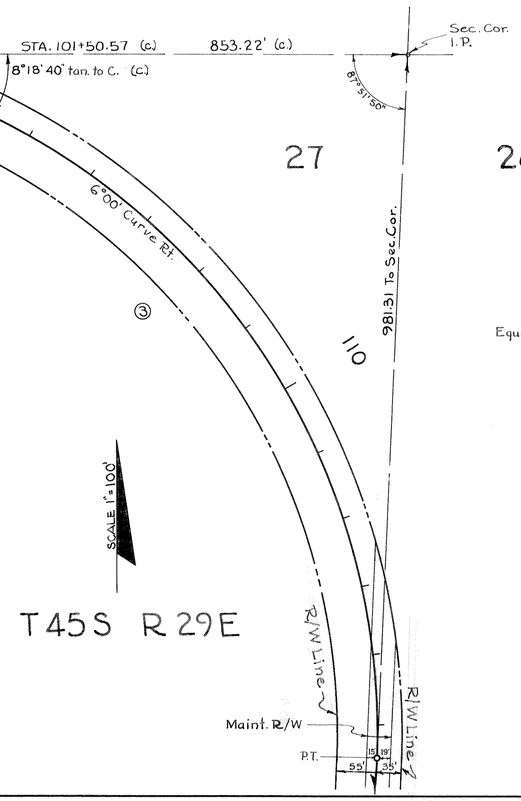

T45S R29E

CURVE Nº ③

P.I. Sta. 110+03.34
Δ = 72°08'30" Rt.
D = 6°00'
R = 954.93'
T = 991.31'
L = 1535.68'
P.C. Sta. 100+12.03
P.T. Sta. 115+47.71 Bk.
Equation (c) = Sta. 115+37.38 Ah.

Carl E. Johnson
Reg. Land Surveyor
Florida Cert. Nº 351

INSERTS FELDA ROAD

STATE OF FLORIDA
STATE ROAD DEPARTMENT

RIGHT OF WAY MAP

SECTION NO. 07580 - 2150

ROAD NO. S-830 HENDRY COUNTY

SCALE 1"=	NAMES	DATES	APPROVED BY
DRAWN	R.P.C.	2/58	H. M. Johnson DIVISION ENGINEER
TRACED	R.P.C.	2/58	for STATE HIGHWAY ENGINEER 1-16-59
INDEXED			
REVISED			
REVISED			

Checked C.E.J. 4/22/58

INDEXED JAN 2 8 1959

FED. ROAD DIV. No.	STATE	SEC. AND JOB No.	FISCAL YEAR	SHEET No.	TOTAL SHEETS
3	FLA.	07580-2150		5	

DRAINAGE EASEMENT
LT. STA. 130+71.00

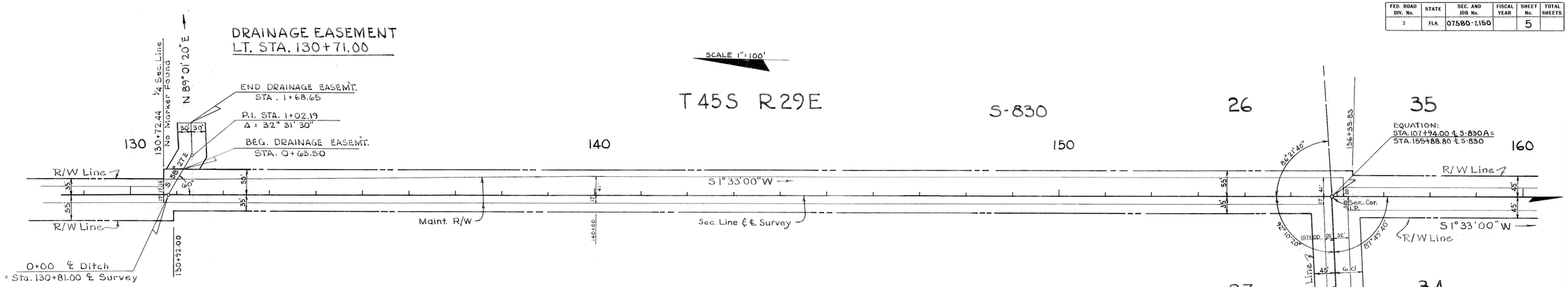

INSERT Nº 1

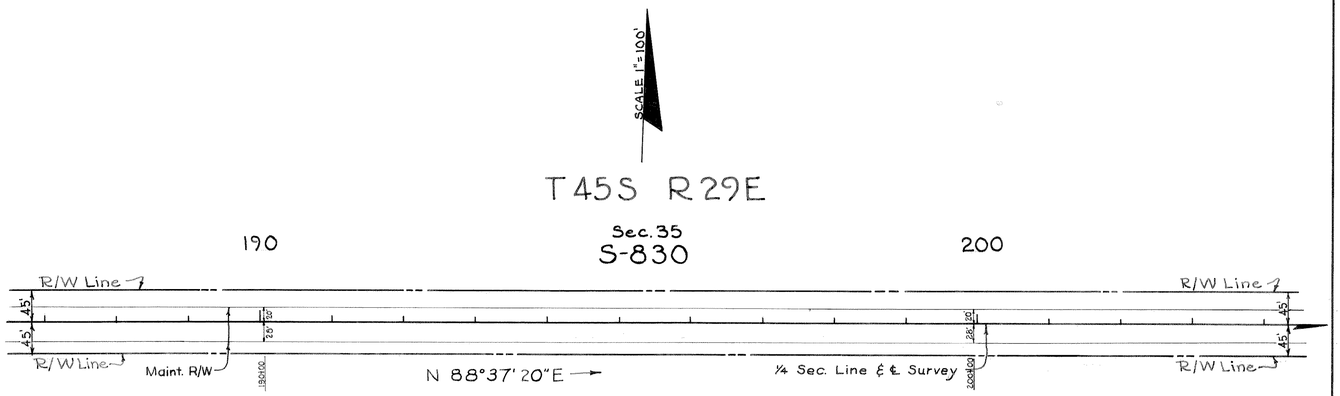

INSERT Nº 3

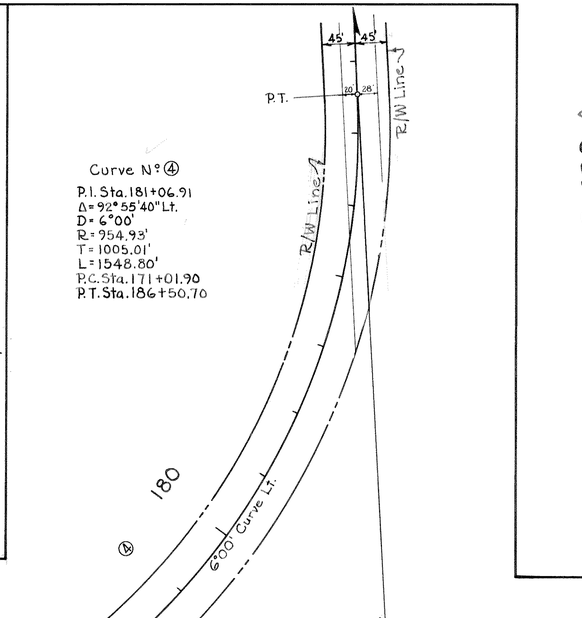

Carl E. Johnson
Reg. Land Surveyor
Florida Cert. Nº 351

INSERT Nº 2

INSERTS
FELDA ROAD

STATE OF FLORIDA
STATE ROAD DEPARTMENT

RIGHT OF WAY MAP

SECTION No. 07580 - 2150

ROAD No. S-830 & S-830-A HENDRY COUNTY

	NAMES	DATES
SCALE 1"=		
DRAWN	R.P.C.	3/58
TRACED	R.P.C.	3/58
INDEXED		
REVISED		
REVISED		

APPROVED BY
A. M. Johnson DIVISION ENGINEER
Horton Bugbee 1-16-59 for STATE HIGHWAY ENGINEER

Checked C.E.J. 4/26/58

5

INDEXED JAN 20 1959

A. R. COGSWELL, JACKSONVILLE

FED. ROAD DIV. No.	STATE	SEC. AND JOB No.	FISCAL YEAR	SHEET No.	TOTAL SHEETS
3	FLA.	07580-2150		6	

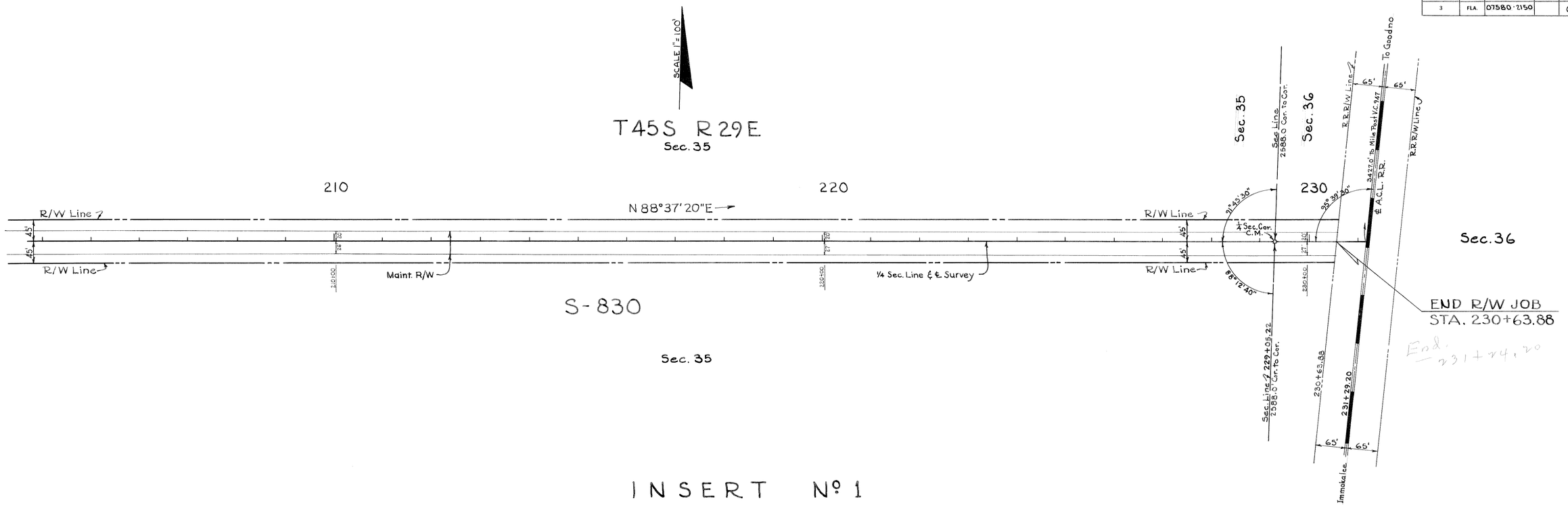

INSERT Nº 1

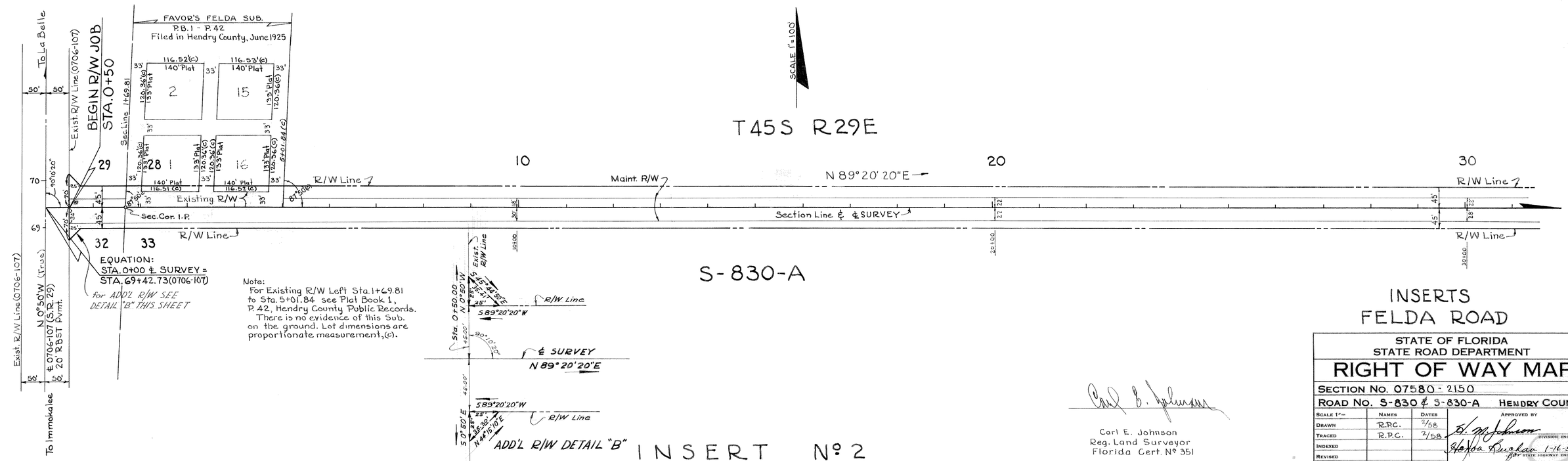

INSERT Nº 2

INSERTS
FELDA ROAD

STATE OF FLORIDA
STATE ROAD DEPARTMENT

RIGHT OF WAY MAP

SECTION NO. 07580 - 2150

ROAD NO. S-830 & S-830-A HENDRY COUNTY

	NAMES	DATES	APPROVED BY
SCALE 1"=			
DRAWN	R.P.C.	2/58	C. E. Johnson DIVISION ENGINEER
TRACED	R.P.C.	2/58	for Hollis Rinehart 1-16-59 for STATE HIGHWAY ENGINEER
INDEXED			
REVISED			
REVISED			

Carl E. Johnson
Reg. Land Surveyor
Florida Cert. Nº 351

INDEXED CHECKED - C.E.J. 4/26/58 JAN 20 1959

6

R. COGSWELL, JACKSONVILLE

FED. ROAD DIV. No.	STATE	SEC. AND JOB No.	FISCAL YEAR	SHEET No.	TOTAL SHEETS
3	FLA.	07580-2150		7	

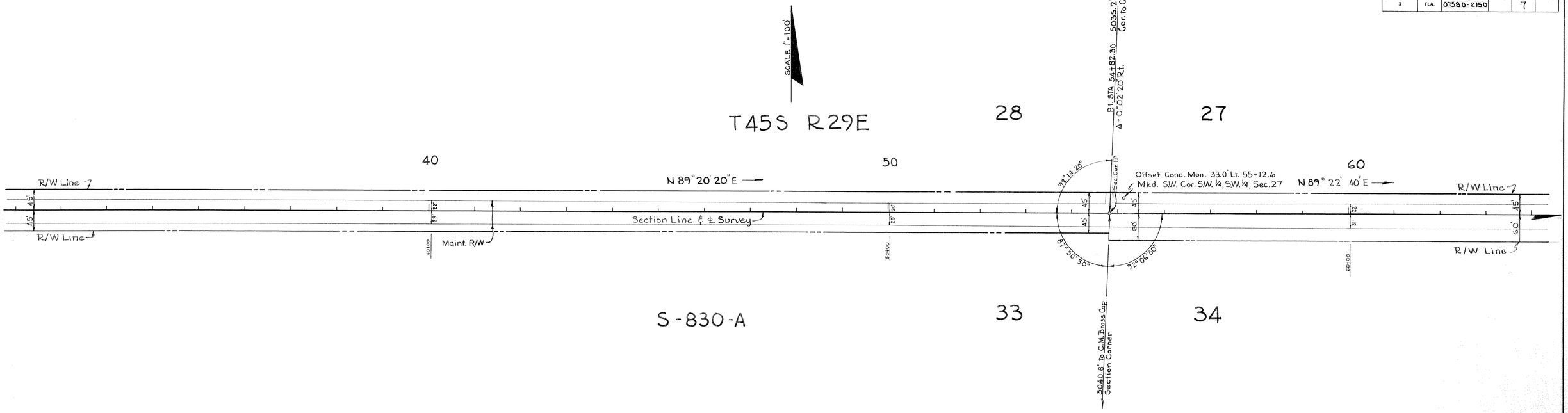

INSERT Nº 1

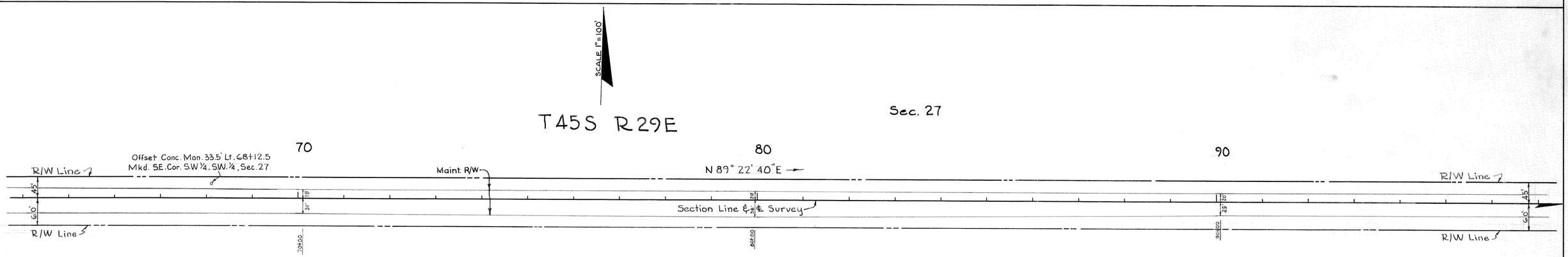

INSERT Nº 2

Carl E. Johnson
Reg. Land Surveyor
Florida Cert. Nº 351

INSERTS
FELDA ROAD

STATE OF FLORIDA
STATE ROAD DEPARTMENT

RIGHT OF WAY MAP

SECTION NO. 07580-2150

ROAD NO. S-830-A HENDRY COUNTY

SCALE 1"=	NAMES	DATES	APPROVED BY
DRAWN	R.P.C.	2/58	E. M. Johnson DIVISION ENGINEER
TRACED	R.P.C.	2/58	for STATE HIGHWAY ENGINEER 1-16-59
INDEXED			
REVISED			
REVISED			

Checked C.E.J. 4/24/58

INDEXED

JAN 20 1959

7

FED. ROAD DIV. No.	STATE	SEC. AND JOB No.	FISCAL YEAR	SHEET No.	TOTAL SHEETS
3	FLA.	07580-2150	58	8	8

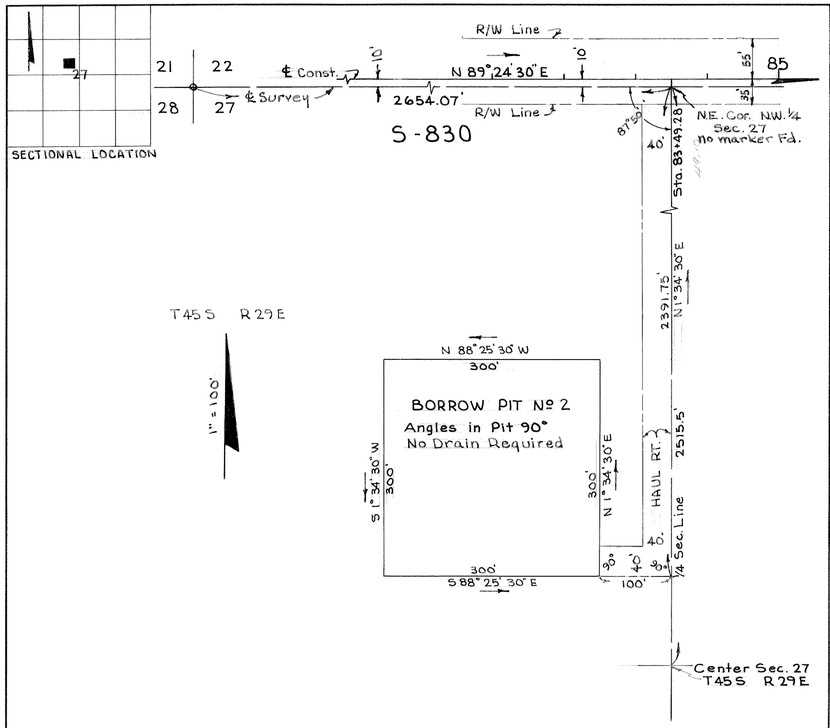

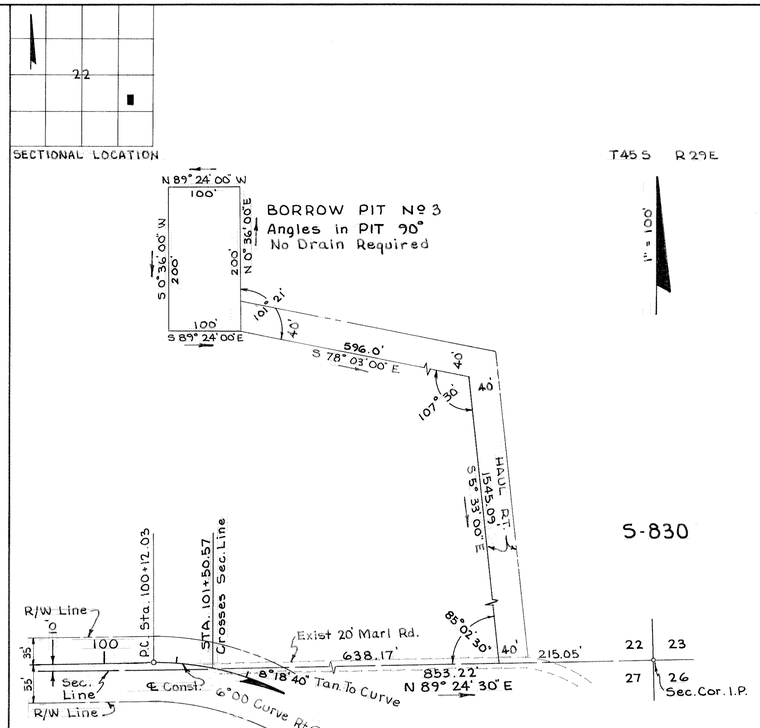

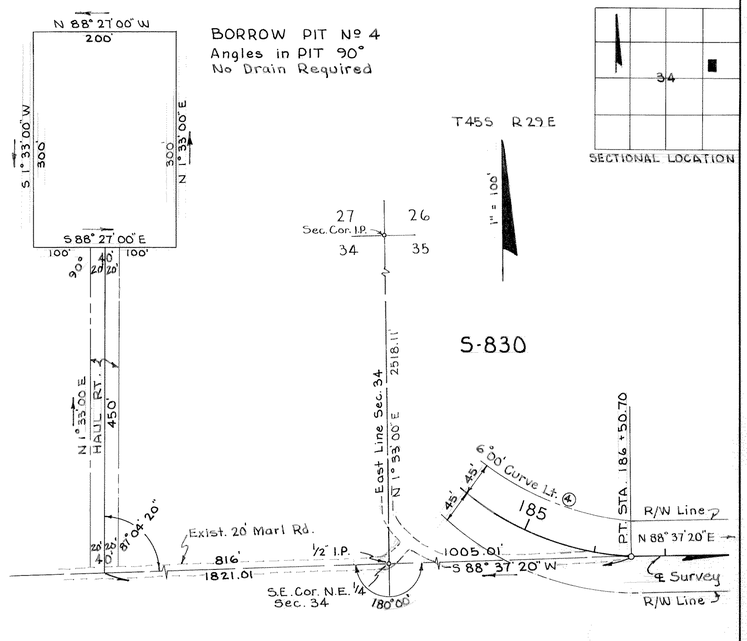

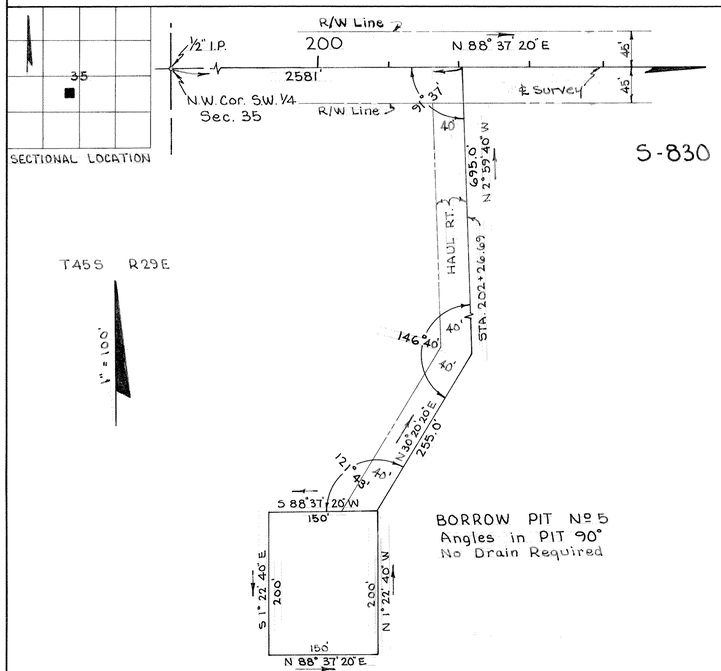

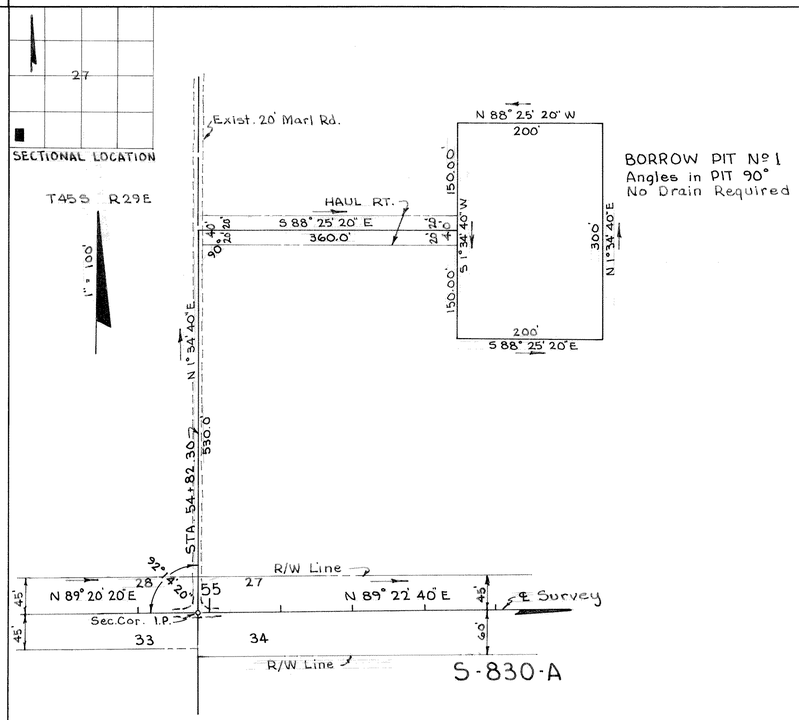

BORROW PITS

Carl E. Johnson
Reg. Land Surveyor
Florida Cert. Nº 351

STATE OF FLORIDA
STATE ROAD DEPARTMENT

RIGHT OF WAY MAP

SECTION No. 07580-2150

ROAD No. S-830 & S-830-A HENDRY COUNTY

	NAMES	DATES	APPROVED BY
SCALE 1"=			
DRAWN	E.L.H.	1/23/59	E. M. Johnson DIVISION ENGINEER
TRACED	E.L.H.	1/26/59	Horton Bynum 2-11-59 STATE HIGHWAY ENGINEER
INDEXED			
REVISED	E.L.H.	2/2/59	
REVISED			

Checked R.P.C. 1/26/59

A. R. COGSWELL, JACKSONVILLE