# STATE OF FLORIDA
# DEPARTMENT OF TRANSPORTATION

# RIGHT OF WAY MAP
# STATE ROAD NO. 93 (I-75)

## ROADWAY ID NUMBER: 01075-000
## FEDERAL AID PROJECT NO. N/A
## FINANCIAL PROJECT ID 413043-2
## CHARLOTTE COUNTY, FLORIDA
## PROJECT LENGTH: 4.409 MILES

## GENERAL NOTES

1. THIS RIGHT OF WAY MAP IS SUPPORTED BY RIGHT OF WAY CONTROL SURVEY, DATED MAY 14, 2013 PREPARED UNDER THE RESPONSIBLE CHARGE OF THOMAS M. HALSTEAD, FLORIDA PROFESSIONAL SURVEYOR AND MAPPER NUMBER 5770. CERTIFIED COPIES OF THE RIGHT OF WAY CONTROL SURVEY MAP (SECTION 07010-000/FINANCIAL PROJECT ID 4082866) ARE FILED OF RECORD IN THE DISTRICT ONE HEADQUARTERS OFFICE OF THE FLORIDA DEPARTMENT OF TRANSPORTATION, LOCATED IN BARTOW, FLORIDA.
2. THE BEARINGS SHOWN ON THIS RIGHT OF WAY MAP ARE BASED ON THE FLORIDA STATE PLANE COORDINATE SYSTEM, WEST ZONE, 1983 NORTH AMERICAN DATUM, 2007 ADJUSTMENT, AS ESTABLISHED FROM NATIONAL GEODETIC SURVEY CONTROL STATIONS AG9469 (4122 15 002) AND AG9459 (GPS 3922 33 002), DERIVING A BEARING OF N 05°14'00" W .
3. PROPERTY BOUNDARIES DETERMINED FROM CERTIFIED SURVEYS, PLATS OF RECORD AND RECORD TITLE. ALL REFERENCED OFFICIAL RECORDS AND PLATS ARE RECORDED IN THE COUNTY OF PROJECT LOCATION, UNLESS OTHERWISE NOTED.
4. ATTENTION IS DIRECTED TO THE FACT THAT THIS MAP MAY HAVE BEEN ALTERED IN SIZE BY REPRODUCTION. THIS MUST BE CONSIDERED WHEN OBTAINING SCALED DATA.
5. THE EFFECTS OF ROUNDING MUST BE CONSIDERED WHEN USING THIS MAP. ALL BEARINGS AND ANGLES HAVE BEEN ROUNDED TO THE NEAREST SECOND WITH DISTANCES BEING ROUNDED TO THE NEAREST HUNDREDTH OF A FOOT.
6. ALL DISTANCES ARE CALCULATED UNLESS OTHERWISE NOTED.
7. ONLY FIXED IMPROVEMENTS PERTINENT TO THE PARCELS TO BE ACQUIRED ARE SHOWN. FIXED INTERIOR IMPROVEMENTS AND UNDERGROUND FOUNDATION ENCROACHMENTS, IF ANY, HAVE NOT BEEN LOCATED.
8. THIS RIGHT OF WAY MAP WAS PREPARED FOR THE PURPOSE OF PREPARING LEGAL LAND DESCRIPTIONS, ACQUISITION DOCUMENTS, MONUMENTATION, PROPERTY MANAGEMENT AND AS AN AID IN THE APPRAISAL OF THE RIGHT OF WAY REQUIRED FOR TRANSPORTATION FACILITIES.
9. THIS MAP IS NOT A SURVEY

## LEGEND

AC - ACRE(S)
AH - AHEAD
AL - ALUMINUM
AVE - AVENUE
BOS - BEGINNING OF SURVEY
BK - BACK
BLDG - BUILDING
BLVD - BOULEVARD
BUS - BUSINESS
C.B. - CONDOMINIUM BOOK
CB - CHORD BEARING
CBS - CONCRETE BLOCK STRUCTURE
CD - CHORD DISTANCE
CM - CONCRETE MONUMENT
CP - CONCRETE PIPE
CR - COUNTY ROAD
CH. - CHAIN(S)
COM - COMMERCIAL
CONC - CONCRETE
COR - CORNER
CT. - COURT
D - DEGREE OF CURVATURE
DB - DEED BOOK
D.E.P. - DEPARTMENT OF ENVIRONMENTAL PROTECTION
FDOT CM - 4"x4"x24" CM CAPPED WITH FDOT BRASS DISK
DR - DRIVE
D.S.Q.A. - DISTRICT SURVEYS QUALITY ASSURANCE
E - EASTING STATE PLANE COORDINATE
EOS - END OF SURVEY
EQ - EQUATION
EXIST - EXISTING
EXT - EXTENSION
FED - FEDERAL
FA - FEDERAL AID
FDOT - FLORIDA DEPARTMENT OF TRANSPORTATION
FIR - FOUND IRON ROD
FIP - FOUND IRON PIPE
FND - FOUND
FPK - FOUND PARKER-KALON NAIL
FPKD - FOUND PARKER-KALON NAIL & DISK
FCM - FOUND CONCRETE MONUMENT
FCIR - FOUND IRON ROD WITH CAP
FP - FINANCIAL PROJECT
GOVT - GOVERNMENT
GRD - GROUND
GPS - GLOBAL POSITIONING SYSTEM
HWY - HIGHWAY
ID - IDENTIFICATION
INC - INCORPORATED
IR - IRON ROD
IRC - IRON ROD WITH CAP
IP - IRON PIPE
L - LENGTH OF CURVE
LB - LAND SURVEYING BUSINESS REGISTRATION NO.
LS - LAND SURVEYOR REGISTRATION NO.
(LL) - LAND LINE
LOC - LIMITS OF CONSTRUCTION
LA - LIMITED ACCESS
LN. - LANE
LW - LIGHTWOOD
LT - LEFT
LTD - LIMITED
MB - MAP BOOK
MAINT. - MAINTAINED
MAS - MASONRY
MI - MILE(S)
MND - MAG NAIL WITH DISK
MON - MONUMENT
N - NORTHING STATE PLANE COORDINATE
NAVD - NORTH AMERICAN VERTICAL DATUM
NTS - NOT TO SCALE
N/A - NOT APPLICABLE
NO. - NUMBER
O/A - OVERALL
ORB - OFFICIAL RECORD BOOK
PB - PLAT BOOK
PC - POINT OF CURVATURE
PCC - POINT OF COMPOUND CURVATURE
PI - POINT OF INTERSECTION
PKWY - PARKWAY
PK - PARKER-KALON NAIL
PKD - PARKER-KALON NAIL WITH DISK
PLS - PROFESSIONAL LAND SURVEYOR
POC - POINT ON CURVE
POL - POINT ON LINE
POT - POINT ON TANGENT
PP - POWER POLE
PRC - POINT OF REVERSE CURVATURE
PRM - PERMANENT REFERENCE MONUMENT
PT - POINT OF TANGENCY
PG - PAGE
PL - PLACE
PSM - PROFESSIONAL SURVEYOR AND MAPPER
PROJ - PROJECT
PUE - PUBLIC UTILITY EASEMENT
PVC - POLYVINYL CHLORIDE
R - RADIUS
RLS - REGISTERED LAND SURVEYOR
RD. - ROAD
RDWY - ROADWAY
RES - RESIDENCE
RGE - RANGE
RR - RAILROAD
RT - RIGHT
R/W - RIGHT OF WAY
SCIR - SET IRON ROD W/CAP "LB 7917" UNLESS OTHERWISE NOTED
SCM - SET CM W/ DISK "LB 7917" UNLESS OTHERWISE NOTED
SEC - SECTION
SF - SQUARE FEET
SMND - SET MAG NAIL W/ DISK "LB 7917" UNLESS OTHERWISE NOTED
SPKD - SET PK W/ DISK "LB 7917" UNLESS OTHERWISE NOTED
SR - STATE ROAD
SWK - SIDEWALK
STR - STREET
STA - STATION
STY. - STORY
T - TANGENT LENGTH OF CURVE
TC - TANGENT TO CURVE
TCE - TEMPORARY CONSTRUCTION EASEMENT
TER - TERRACE
TWP - TOWNSHIP
UE - UTILITY EASEMENT
USGLO - UNITED STATES GOVERNMENT LAND OFFICE
WC - WITNESS CORNER
WPI - WORK PROGRAM ITEM
W/ - WITH
℄ - BASE LINE
℄ - PROPERTY LINE OF PARENT TRACT
Δ - DEFLECTION ANGLE OR CENTRAL ANGLE
(C) - CALCULATED DATA
(D) - DEED DATA
(F) - FIELD DATA
(P) - PLAT DATA
# - NUMBER
⬭ - BLOCK NUMBER/LETTER

COUNTY LINE
TOWNSHIP LINE
SECTION LINE
QUARTER SECTION LINE
PROPERTY LINE
CITY LIMIT LINE
FENCE LINE
SURVEY BASE LINE
GOVERNMENT LOT LINE
PERPETUAL EASEMENT LINE
EXISTING EASEMENT LINE
VACATED/ ORIGINAL LOT LINE
R/W LINE
EXISTING R/W LINE
EXISTING LIMITED ACCESS R/W LINE
RAILROADS

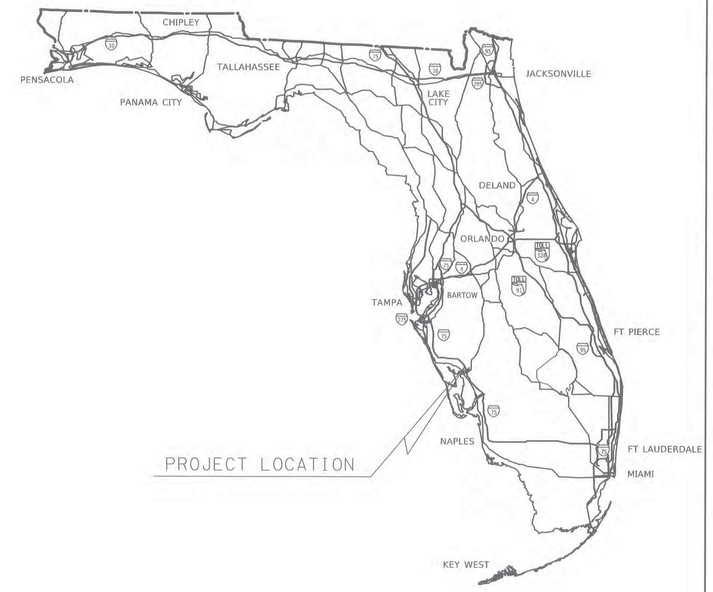


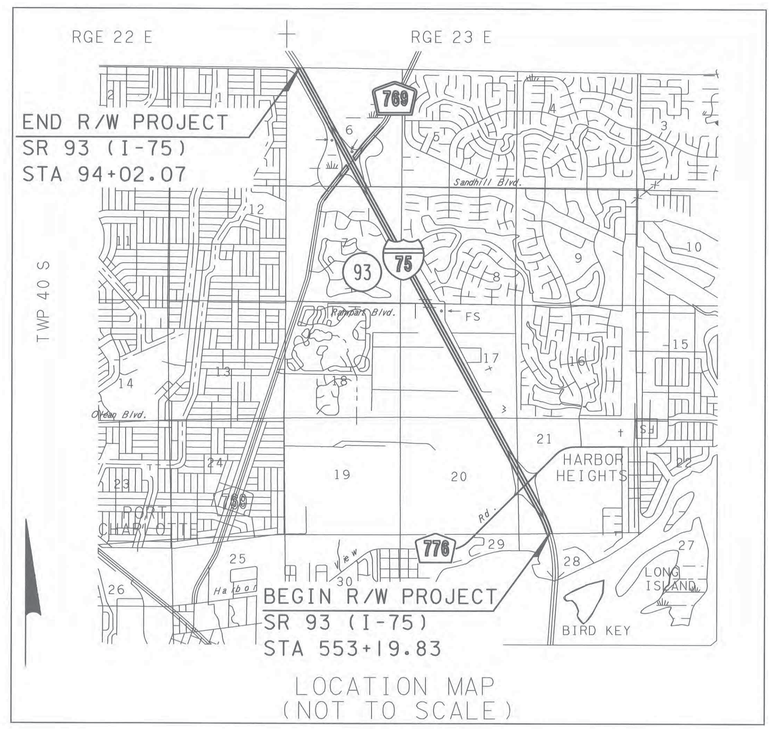


LOCATION MAP
(NOT TO SCALE)

## INDEX


| SHEET NO. | SHEET DESCRIPTION |
|---|---|
| 1 | COVER SHEET |
| 2 - 5 | KEY MAPS |
| 6 - 28 | DETAIL SHEETS |
| 29 - 34 | REFERENCE SHEETS |
| 35 | TABLE OF OWNERSHIP SHEET |


| PARCEL NUMBER IDENTIFICATION | TYPE USE |
|---|---|
| 100 - 699 | DEEDS OF ALL TYPES |
| 700 - 799 | TEMPORARY EASEMENTS |
| 800 - 899 | PERPETUAL EASEMENTS |
| 900 - 999 | LICENSE AGREEMENTS |

COVER SHEET
SR 93 (I-75)
FROM: SOUTH OF HARBORVIEW ROAD
TO: NORTH OF KINGS HIGHWAY
THIS MAP IS NOT A SURVEY

RIGHT OF WAY MAP

FLORIDA DEPARTMENT OF TRANSPORTATION
SURVEYING AND MAPPING

APPROVED BY — DATE
05-20-2014
FOR DISTRICT SECRETARY

| REVISION | BY | DATE | REVISION | BY | DATE |
|---|---|---|---|---|---|
| | | | | | |

| | BY | DATE |
|---|---|---|
| PRELIM | G. JONES | 5/14/13 |
| FINAL | G. JONES | 5/8/14 |
| CHECKED | D.S.Q.A. | 5/7/14 |

FA PROJ NO. N/A — SECTION 01075-000
STATE ROAD NO. 93 — CHARLOTTE COUNTY

MAPS PREPARED BY: McKIM & CREED, INC
WPI NO. N/A
FP ID 413043-2

FIELD BOOK NUMBERS: 502606, 502622
SCALE: NTS
SHEET 1

CURVE 1
PI STA 548+79.47
MON NOT FND OR SET
DELTA = 32°28'48" LT
D = 1°00'00"
T = 1668.94'
L = 3248.01'
R = 5729.58'
PC STA 532+10.53
PT STA 564+58.54

CURVE 2
PI STA 54+74.67
IRC 5/8"
"LB 7917"
DELTA = 45°32'30" RT
D = 5°30'00"
T = 437.28'
L = 828.03'
R = 1041.74'
PC STA 50+37.39
PT STA 58+65.42

DATE OF AERIAL PHOTOGRAPHY: SEPTEMBER 3, 2012

KEY MAP "A"
SR 93 (I-75)
FROM: SOUTH OF HARBORVIEW ROAD
TO: NORTH OF KINGS HIGHWAY
SEE SHEET ONE FOR LEGEND
AND GENERAL NOTES
THIS MAP IS NOT A SURVEY

| RIGHT OF WAY MAP | FLORIDA DEPARTMENT OF TRANSPORTATION SURVEYING AND MAPPING | APPROVED BY / DATE: 05-20-2014 FOR DISTRICT SECRETARY | REVISION | BY | DATE | REVISION | BY | DATE |
|---|---|---|---|---|---|---|---|---|

| | BY | DATE |
|---|---|---|
| PRELIM | G. JONES | 5/14/13 |
| FINAL | G. JONES | 5/8/14 |
| CHECKED | D.S.Q.A. | 5/7/14 |

FA PROJ NO. N/A — SECTION 01075-000
STATE ROAD NO. 93 — CHARLOTTE COUNTY

MAPS PREPARED BY: McKIM & CREED, INC
WPI NO. N/A
FIELD BOOK NUMBERS: SEE SHEET ONE
SCALE: 1" = 400'
FP ID 413043-2
SHEET 2

# SECTION 17, TOWNSHIP 40 SOUTH, RANGE 23 EAST

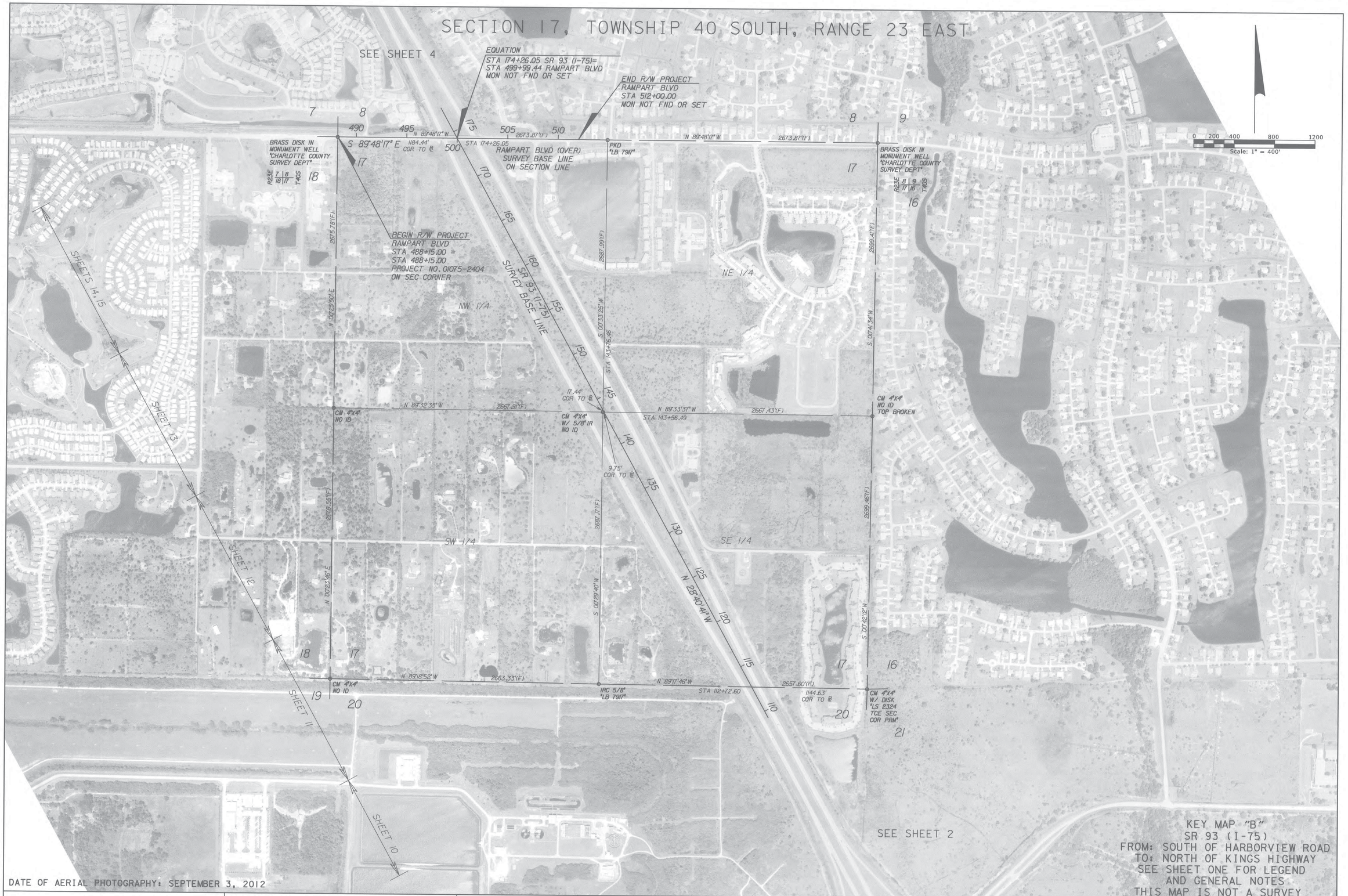


DATE OF AERIAL PHOTOGRAPHY: SEPTEMBER 3, 2012

KEY MAP "B"
SR 93 (I-75)
FROM: SOUTH OF HARBORVIEW ROAD
TO: NORTH OF KINGS HIGHWAY
SEE SHEET ONE FOR LEGEND
AND GENERAL NOTES
THIS MAP IS NOT A SURVEY

RIGHT OF WAY MAP

FLORIDA DEPARTMENT OF TRANSPORTATION
SURVEYING AND MAPPING

APPROVED BY DATE
05-20-2014
FOR DISTRICT SECRETARY

| REVISION | BY | DATE | REVISION | BY | DATE |
|---|---|---|---|---|---|
| | | | | | |

| | BY | DATE |
|---|---|---|
| PRELIM | G. JONES | 5/14/13 |
| FINAL | G. JONES | 5/8/14 |
| CHECKED | D.S.Q.A. | 5/7/14 |

FA PROJ NO. N/A — SECTION 01075-000

STATE ROAD NO. 93 — CHARLOTTE COUNTY

MAPS PREPARED BY: McKIM & CREED, INC
FIELD BOOK NUMBERS: SEE SHEET ONE
WPI NO. N/A
SCALE: 1" = 400'
FP ID 413043-2
SHEET 3

DATE OF AERIAL PHOTOGRAPHY: SEPTEMBER 3, 2012

| RIGHT OF WAY MAP | FLORIDA DEPARTMENT OF TRANSPORTATION SURVEYING AND MAPPING | APPROVED BY / DATE: 05-20-2014 FOR DISTRICT SECRETARY | REVISION | BY | DATE | REVISION | BY | DATE |
|---|---|---|---|---|---|---|---|---|

| | BY | DATE |
|---|---|---|
| PRELIM | G. JONES | 5/14/13 |
| FINAL | G. JONES | 5/8/14 |
| CHECKED | D.S.Q.A. | 5/7/14 |

FA PROJ NO. N/A — SECTION 01075-000

STATE ROAD NO. 93 — CHARLOTTE COUNTY

MAPS PREPARED BY McKIM & CREED, INC — WPI NO. N/A

FIELD BOOK NUMBERS SEE SHEET ONE — SCALE: 1" = 400'

FP ID 413043-2 — SHEET 4

RIGHT OF WAY MAP

FLORIDA DEPARTMENT OF TRANSPORTATION
SURVEYING AND MAPPING

APPROVED BY DATE
05-20-2014
FOR DISTRICT SECRETARY

| REVISION | BY | DATE | REVISION | BY | DATE |
|---|---|---|---|---|---|
| | | | | | |

| | BY | DATE |
|---|---|---|
| PRELIM | G. JONES | 5/14/13 |
| FINAL | G. JONES | 5/8/14 |
| CHECKED | D.S.Q.A. | 5/7/14 |

FA PROJ NO. N/A — SECTION 01075-000

STATE ROAD NO. 93 — CHARLOTTE COUNTY

MAPS PREPARED BY McKIM & CREED, INC

WPI NO. N/A

FP ID 413043-2

FIELD BOOK NUMBERS SEE SHEET ONE

SCALE: 1" = 400'

SHEET 5

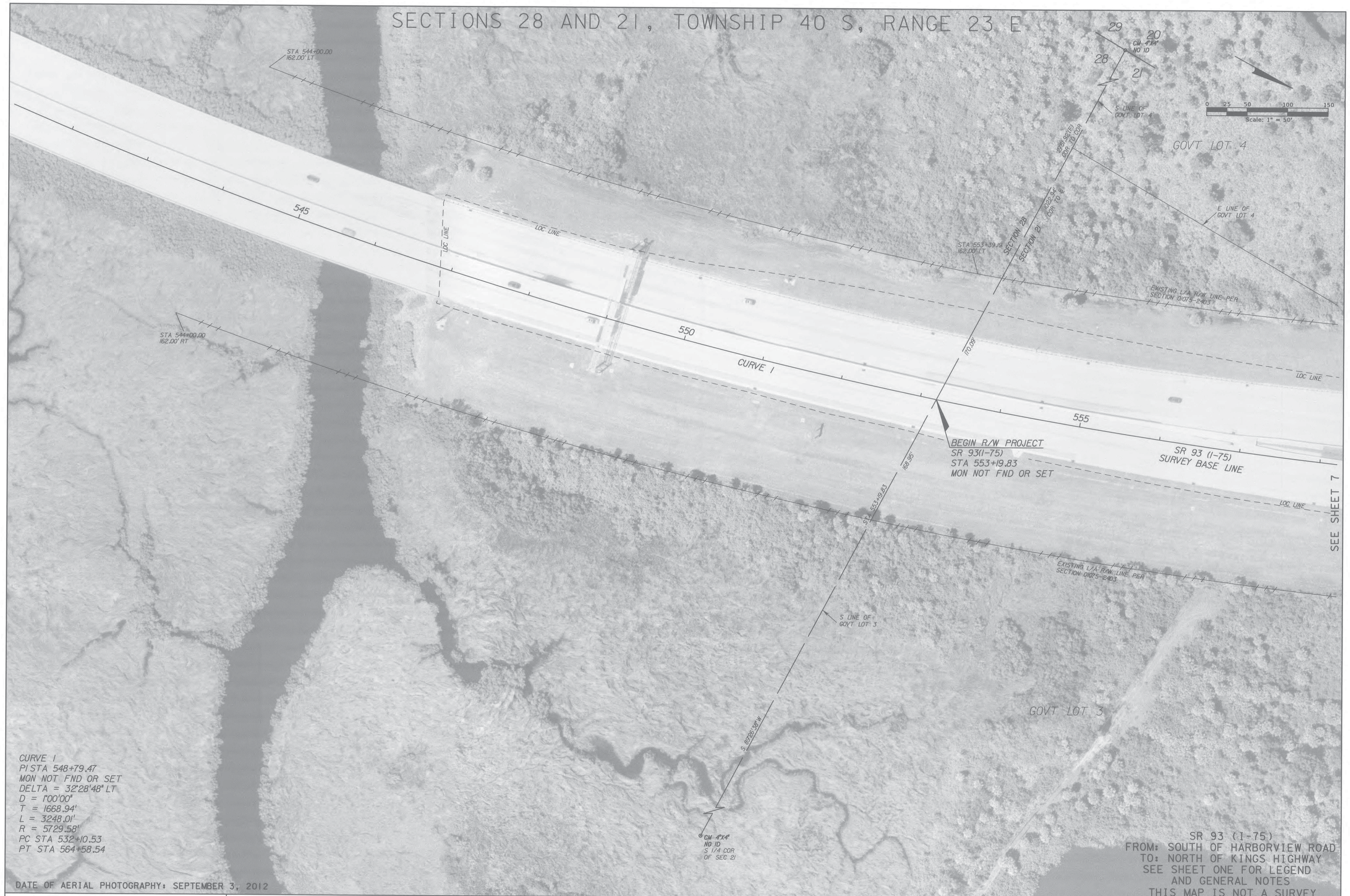


| RIGHT OF WAY MAP | FLORIDA DEPARTMENT OF TRANSPORTATION<br>SURVEYING AND MAPPING | APPROVED BY DATE<br>05-20-2014<br>FOR DISTRICT SECRETARY | REVISION | BY | DATE | REVISION | BY | DATE |
|---|---|---|---|---|---|---|---|---|

| | BY | DATE |
|---|---|---|
| PRELIM | G. JONES | 5/14/13 |
| FINAL | G. JONES | 5/8/14 |
| CHECKED | D.S.O.A. | 5/7/14 |

| | | | |
|---|---|---|---|
| FA PROJ NO. N/A | SECTION 01075-000 | MAPS PREPARED BY McKIM & CREED, INC | FIELD BOOK NUMBERS SEE SHEET ONE |
| | | WPI NO. N/A | SCALE: 1" = 50' |
| STATE ROAD NO. 93 | CHARLOTTE COUNTY | FP ID 413043-2 | SHEET 6 |

| | | | | | | | | | | | | | | | | | |
|---|---|---|---|---|---|---|---|---|---|---|---|---|---|---|---|---|---|
| RIGHT OF WAY MAP | FLORIDA DEPARTMENT OF TRANSPORTATION<br>SURVEYING AND MAPPING | APPROVED BY DATE<br>05-20-2014<br>FOR DISTRICT SECRETARY | REVISION | BY | DATE | REVISION | BY | DATE | | BY | DATE | FA PROJ NO. N/A | SECTION 01075-000 | MAPS PREPARED BY<br>McKIM & CREED, INC | FIELD BOOK NUMBERS<br>SEE SHEET ONE |
| | | | | | | | | | PRELIM | G. JONES | 5/14/13 | | | WPI NO. N/A | SCALE: 1" = 50' |
| | | | | | | | | | FINAL | G. JONES | 5/8/14 | STATE ROAD NO. 93 | CHARLOTTE COUNTY | FP ID 413043-2 | SHEET 7 |
| | | | | | | | | | CHECKED | D.S.Q.A. | 5/7/14 | | | | |

# SECTIONS 20 AND 21, TOWNSHIP 40 S, RANGE 23 E

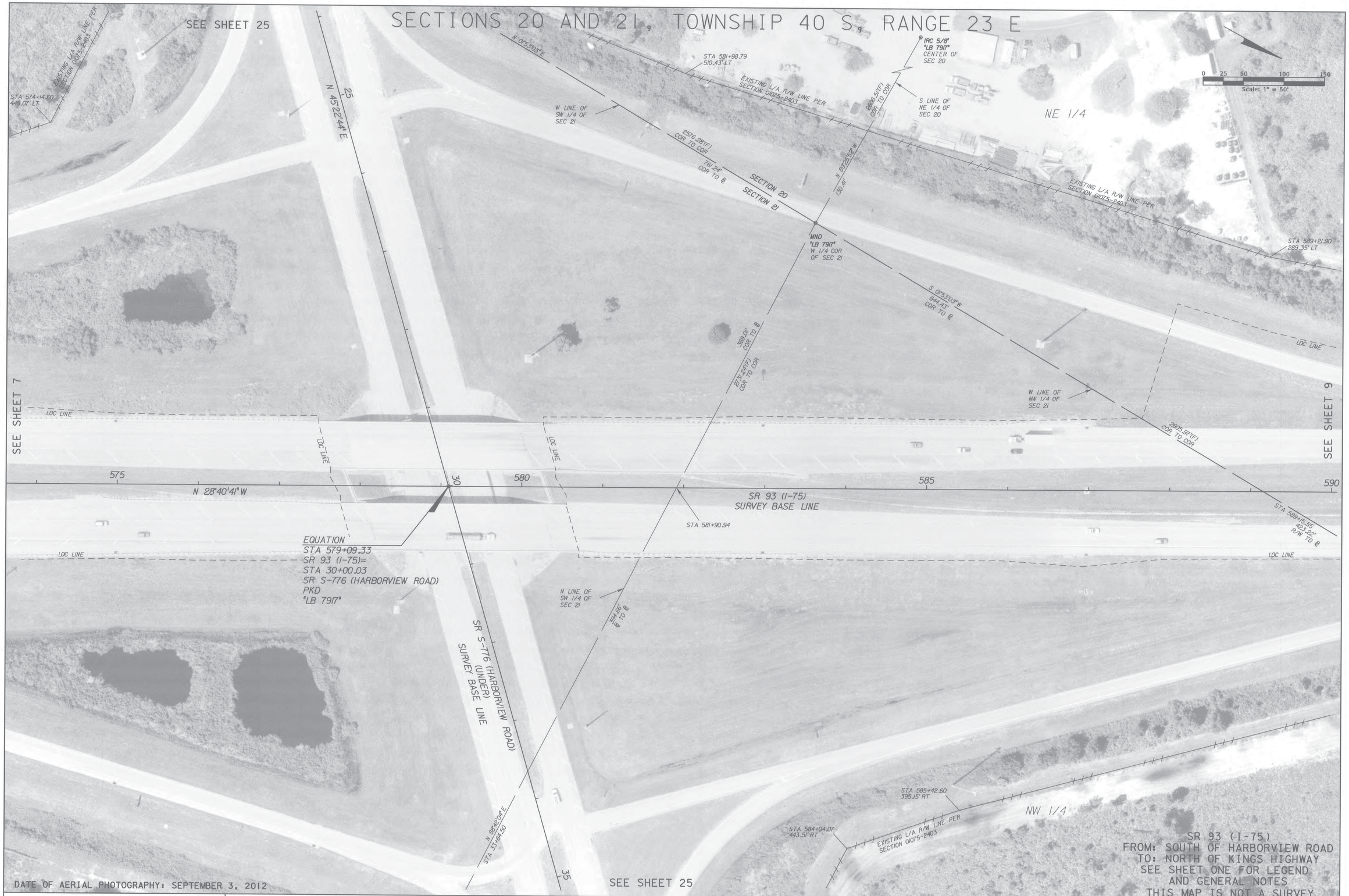


| RIGHT OF WAY MAP | FLORIDA DEPARTMENT OF TRANSPORTATION SURVEYING AND MAPPING | APPROVED BY / DATE: 05-20-2014 FOR DISTRICT SECRETARY | REVISION / BY / DATE | REVISION / BY / DATE |
|---|---|---|---|---|

| | BY | DATE |
|---|---|---|
| PRELIM | G. JONES | 5/14/13 |
| FINAL | G. JONES | 5/8/14 |
| CHECKED | D.S.O.A. | 5/7/14 |

| | |
|---|---|
| FA PROJ NO. N/A | SECTION 01075-000 |
| STATE ROAD NO. 93 | CHARLOTTE COUNTY |

| | |
|---|---|
| MAPS PREPARED BY McKIM & CREED, INC | FIELD BOOK NUMBERS SEE SHEET ONE |
| WPI NO. N/A | SCALE: 1" = 50' |
| FP ID 413043-2 | SHEET 8 |

# SECTIONS 20 AND 21, TOWNSHIP 40 S, RANGE 23 E

SR 93 (I-75)
FROM: SOUTH OF HARBORVIEW ROAD
TO: NORTH OF KINGS HIGHWAY
SEE SHEET ONE FOR LEGEND
AND GENERAL NOTES
THIS MAP IS NOT A SURVEY

| RIGHT OF WAY MAP | FLORIDA DEPARTMENT OF TRANSPORTATION SURVEYING AND MAPPING | APPROVED BY / DATE: 05-20-2014 FOR DISTRICT SECRETARY | REVISION | BY | DATE | REVISION | BY | DATE |
|---|---|---|---|---|---|---|---|---|

| | BY | DATE |
|---|---|---|
| PRELIM | G. JONES | 5/14/13 |
| FINAL | G. JONES | 5/8/14 |
| CHECKED | D.S.Q.A. | 5/7/14 |

FA PROJ NO. N/A — SECTION 01075-000
STATE ROAD NO. 93 — CHARLOTTE COUNTY

MAPS PREPARED BY: McKIM & CREED, INC
WPI NO. N/A
FIELD BOOK NUMBERS: SEE SHEET ONE
SCALE: 1" = 50'
FP ID 413043-2
SHEET 9

| RIGHT OF WAY MAP | FLORIDA DEPARTMENT OF TRANSPORTATION SURVEYING AND MAPPING | APPROVED BY / DATE: 05-20-2014 FOR DISTRICT SECRETARY | REVISION | BY | DATE | REVISION | BY | DATE |
|---|---|---|---|---|---|---|---|---|

| | BY | DATE |
|---|---|---|
| PRELIM | G. JONES | 5/14/13 |
| FINAL | G. JONES | 5/8/14 |
| CHECKED | D.S.Q.A. | 5/7/14 |

FA PROJ NO. N/A — SECTION 01075-000

STATE ROAD NO. 93 — CHARLOTTE COUNTY

MAPS PREPARED BY McKIM & CREED, INC — FIELD BOOK NUMBERS SEE SHEET ONE

WPI NO. N/A — SCALE: 1" = 50'

FP ID 413043-2 — SHEET 10

| | | | | | | | | | | | | | | | | | |
|---|---|---|---|---|---|---|---|---|---|---|---|---|---|---|---|---|---|
| RIGHT OF WAY MAP | FLORIDA DEPARTMENT OF TRANSPORTATION<br>SURVEYING AND MAPPING | APPROVED BY<br>[signature] 05-20-2014<br>FOR DISTRICT SECRETARY | DATE | REVISION | BY | DATE | REVISION | BY | DATE | | BY | DATE | FA PROJ NO. N/A | SECTION 01075-000 | MAPS PREPARED BY<br>McKIM & CREED, INC | FIELD BOOK NUMBERS<br>SEE SHEET ONE | |
| | | | | | | | | | | PRELIM | G. JONES | 5/14/13 | | | WPI NO. N/A | SCALE: 1" = 50' | |
| | | | | | | | | | | FINAL | G. JONES | 5/8/14 | STATE ROAD NO. 93 | CHARLOTTE COUNTY | FP ID 413043-2 | SHEET 11 | |
| | | | | | | | | | | CHECKED | D.S.Q.A. | 5/7/14 | | | | | |

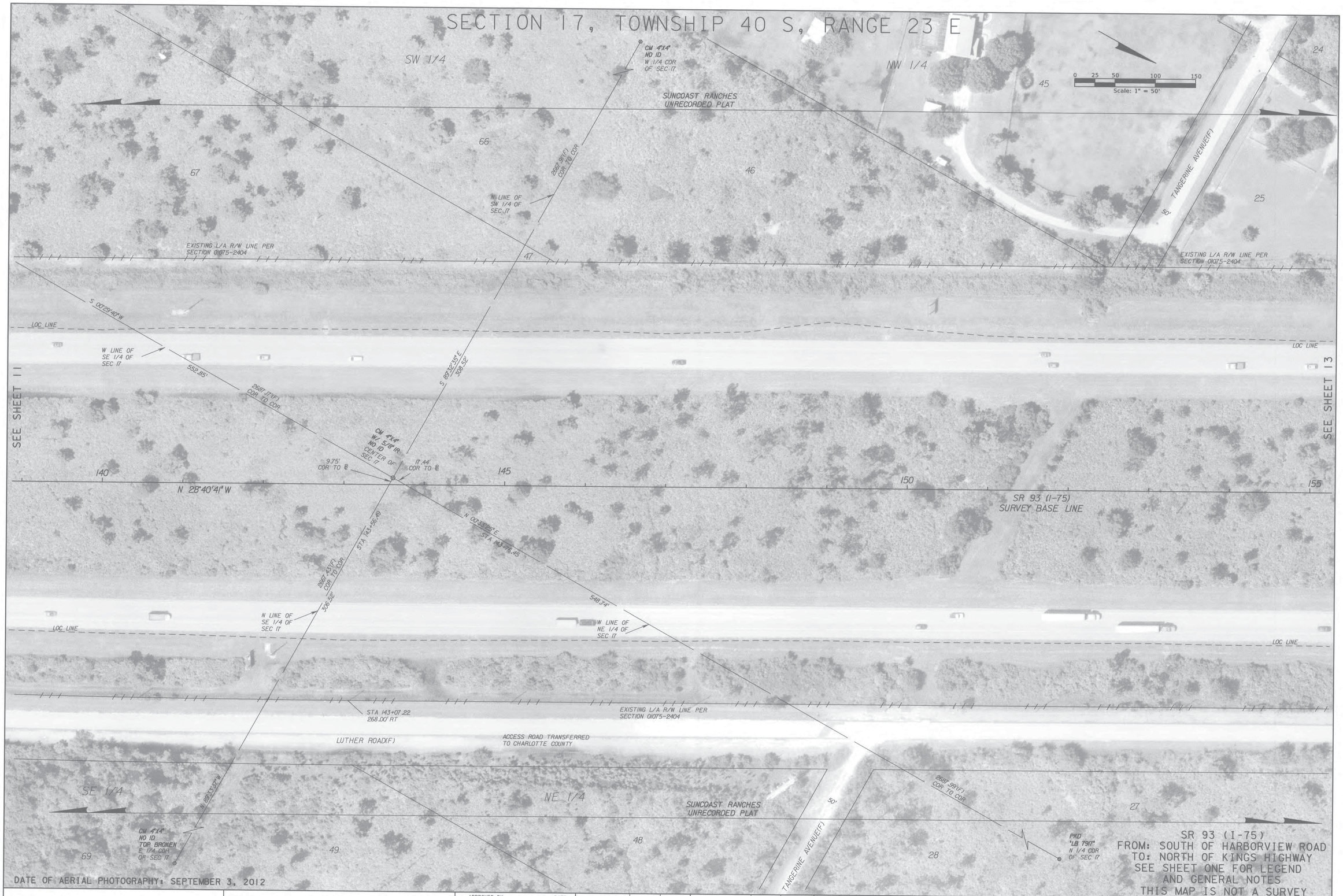


RIGHT OF WAY MAP

FLORIDA DEPARTMENT OF TRANSPORTATION
SURVEYING AND MAPPING

APPROVED BY — DATE: 05-20-2014
FOR DISTRICT SECRETARY

| REVISION | BY | DATE | REVISION | BY | DATE |
|---|---|---|---|---|---|
| | | | | | |

| | BY | DATE |
|---|---|---|
| PRELIM | G. JONES | 5/14/13 |
| FINAL | G. JONES | 5/8/14 |
| CHECKED | D.S.Q.A. | 5/7/14 |

FA PROJ NO. N/A — SECTION 01075-000

STATE ROAD NO. 93 — CHARLOTTE COUNTY

MAPS PREPARED BY: McKIM & CREED, INC

WPI NO. N/A

FP ID 413043-2

FIELD BOOK NUMBERS: SEE SHEET ONE

SCALE: 1" = 50'

SHEET 12

RIGHT OF WAY MAP

FLORIDA DEPARTMENT OF TRANSPORTATION
SURVEYING AND MAPPING

APPROVED BY DATE
05-20-2014
FOR DISTRICT SECRETARY

| REVISION | BY | DATE | REVISION | BY | DATE |
|---|---|---|---|---|---|
| | | | | | |

| | BY | DATE |
|---|---|---|
| PRELIM | G. JONES | 5/14/13 |
| FINAL | G. JONES | 5/8/14 |
| CHECKED | D.S.Q.A. | 5/7/14 |

FA PROJ NO. N/A — SECTION 01075-000

STATE ROAD NO. 93 — CHARLOTTE COUNTY

MAPS PREPARED BY: McKIM & CREED, INC

WPI NO. N/A

FP ID 413043-2

FIELD BOOK NUMBERS: SEE SHEET ONE

SCALE: 1" = 50'

SHEET 13

# SECTIONS 8 AND 17, TOWNSHIP 40 S, RANGE 23 E

DATE OF AERIAL PHOTOGRAPHY: SEPTEMBER 3, 2012

SR 93 (I-75)
FROM: SOUTH OF HARBORVIEW ROAD
TO: NORTH OF KINGS HIGHWAY
SEE SHEET ONE FOR LEGEND AND GENERAL NOTES
THIS MAP IS NOT A SURVEY

RIGHT OF WAY MAP

FLORIDA DEPARTMENT OF TRANSPORTATION
SURVEYING AND MAPPING

APPROVED BY — DATE: 05-20-2014
FOR DISTRICT SECRETARY

| REVISION | BY | DATE | REVISION | BY | DATE |
|---|---|---|---|---|---|
| | | | | | |

| | BY | DATE |
|---|---|---|
| PRELIM | G. JONES | 5/14/13 |
| FINAL | G. JONES | 5/8/14 |
| CHECKED | D.S.O.A. | 5/7/14 |

FA PROJ NO. N/A — SECTION 01075-000
STATE ROAD NO. 93 — CHARLOTTE COUNTY

MAPS PREPARED BY: McKIM & CREED, INC
WPI NO. N/A
FP ID 413043-2

FIELD BOOK NUMBERS: SEE SHEET ONE
SCALE: 1" = 50'

SHEET 14

| RIGHT OF WAY MAP | FLORIDA DEPARTMENT OF TRANSPORTATION SURVEYING AND MAPPING | APPROVED BY / DATE: 05-20-2014 FOR DISTRICT SECRETARY | REVISION / BY / DATE | REVISION / BY / DATE |
|---|---|---|---|---|

| | BY | DATE |
|---|---|---|
| PRELIM | G. JONES | 5/14/13 |
| FINAL | G. JONES | 5/8/14 |
| CHECKED | D.S.Q.A. | 5/7/14 |

FA PROJ NO. N/A — SECTION 01075-000
STATE ROAD NO. 93 — CHARLOTTE COUNTY

MAPS PREPARED BY: McKIM & CREED, INC
WPI NO. N/A
FP ID 413043-2
FIELD BOOK NUMBERS: SEE SHEET ONE
SCALE: 1" = 50'
SHEET 15

DATE OF AERIAL PHOTOGRAPHY: SEPTEMBER 3, 2012

| RIGHT OF WAY MAP | FLORIDA DEPARTMENT OF TRANSPORTATION SURVEYING AND MAPPING | APPROVED BY / DATE: 05-20-2014 FOR DISTRICT SECRETARY | REVISION | BY | DATE | REVISION | BY | DATE |
|---|---|---|---|---|---|---|---|---|

| | BY | DATE |
|---|---|---|
| PRELIM | G. JONES | 5/14/13 |
| FINAL | G. JONES | 5/8/14 |
| CHECKED | D.S.Q.A. | 5/7/14 |

FA PROJ NO. N/A — SECTION 01075-000

STATE ROAD NO. 93 — CHARLOTTE COUNTY

MAPS PREPARED BY McKIM & CREED, INC — FIELD BOOK NUMBERS SEE SHEET ONE

WPI NO. N/A — SCALE: 1" = 50'

FP ID 413043-2 — SHEET 16

| RIGHT OF WAY MAP | FLORIDA DEPARTMENT OF TRANSPORTATION SURVEYING AND MAPPING | APPROVED BY / DATE: 05-20-2014 — FOR DISTRICT SECRETARY | REVISION / BY / DATE | REVISION / BY / DATE |
|---|---|---|---|---|

| | BY | DATE |
|---|---|---|
| PRELIM | G. JONES | 5/14/13 |
| FINAL | G. JONES | 5/8/14 |
| CHECKED | D.S.G.A. | 5/7/14 |

| | | |
|---|---|---|
| FA PROJ NO. N/A | SECTION 01075-000 | MAPS PREPARED BY: McKIM & CREED, INC |
| STATE ROAD NO. 93 | CHARLOTTE COUNTY | WPI NO. N/A |
| FP ID 413043-2 | | FIELD BOOK NUMBERS: SEE SHEET ONE |
| | | SCALE: 1" = 50' |
| | | SHEET 17 |

RIGHT OF WAY MAP

FLORIDA DEPARTMENT OF TRANSPORTATION
SURVEYING AND MAPPING

APPROVED BY — DATE
05-20-2014
FOR DISTRICT SECRETARY

| REVISION | BY | DATE | REVISION | BY | DATE |
|---|---|---|---|---|---|
| | | | | | |

| | BY | DATE |
|---|---|---|
| PRELIM | G. JONES | 5/14/13 |
| FINAL | G. JONES | 5/8/14 |
| CHECKED | D.S.Q.A. | 5/7/14 |

FA PROJ NO. N/A — SECTION 01075-000

STATE ROAD NO. 93 — CHARLOTTE COUNTY

MAPS PREPARED BY: McKIM & CREED, INC

FIELD BOOK NUMBERS: SEE SHEET ONE

WPI NO. N/A — SCALE: 1" = 50'

FP ID 413043-2 — SHEET 18

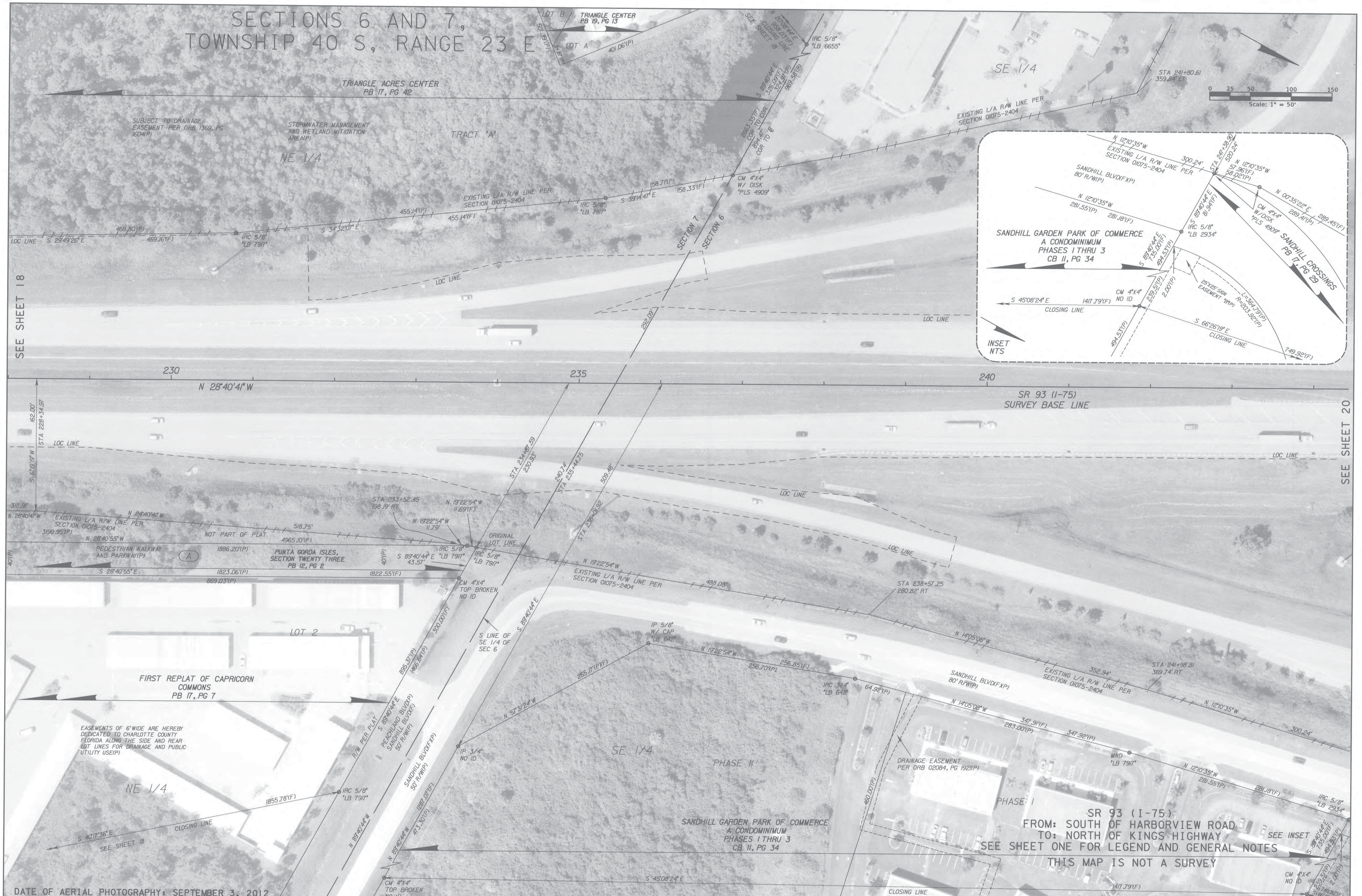


| RIGHT OF WAY MAP | FLORIDA DEPARTMENT OF TRANSPORTATION SURVEYING AND MAPPING | APPROVED BY / DATE: 05-20-2014 — FOR DISTRICT SECRETARY | REVISION / BY / DATE / REVISION / BY / DATE | | BY | DATE | FA PROJ NO. N/A | SECTION 01075-000 | MAPS PREPARED BY McKIM & CREED, INC | FIELD BOOK NUMBERS SEE SHEET ONE |
|---|---|---|---|---|---|---|---|---|---|---|
| | | | | PRELIM | G. JONES | 5/14/13 | | | WPI NO. N/A | SCALE: 1" = 50' |
| | | | | FINAL | G. JONES | 5/8/14 | STATE ROAD NO. 93 | CHARLOTTE COUNTY | FP ID 413043-2 | SHEET 19 |
| | | | | CHECKED | D.S.Q.A. | 5/7/14 | | | | |

RIGHT OF WAY MAP

FLORIDA DEPARTMENT OF TRANSPORTATION
SURVEYING AND MAPPING

APPROVED BY — DATE
05-20-2014
FOR DISTRICT SECRETARY

| REVISION | BY | DATE | REVISION | BY | DATE |
|---|---|---|---|---|---|
| | | | | | |

| | BY | DATE |
|---|---|---|
| PRELIM | G. JONES | 5/14/13 |
| FINAL | G. JONES | 5/8/14 |
| CHECKED | D.S.Q.A. | 5/7/14 |

FA PROJ NO. N/A — SECTION 01075-000

STATE ROAD NO. 93 — CHARLOTTE COUNTY

MAPS PREPARED BY: McKIM & CREED, INC
WPI NO. N/A
FP ID 413043-2

FIELD BOOK NUMBERS: SEE SHEET ONE
SCALE: 1" = 50'

SHEET 20

RIGHT OF WAY MAP

FLORIDA DEPARTMENT OF TRANSPORTATION
SURVEYING AND MAPPING

APPROVED BY — DATE
05-20-2014
FOR DISTRICT SECRETARY

| REVISION | BY | DATE | REVISION | BY | DATE |
|---|---|---|---|---|---|
| | | | | | |

| | BY | DATE |
|---|---|---|
| PRELIM | G. JONES | 5/14/13 |
| FINAL | G. JONES | 5/8/14 |
| CHECKED | D.S.Q.A. | 5/7/14 |

FA PROJ NO. N/A — SECTION 01075-000

STATE ROAD NO. 93 — CHARLOTTE COUNTY

MAPS PREPARED BY McKIM & CREED, INC

WPI NO. N/A

FIELD BOOK NUMBERS SEE SHEET ONE

SCALE: 1" = 50'

FP ID 413043-2

SHEET 21

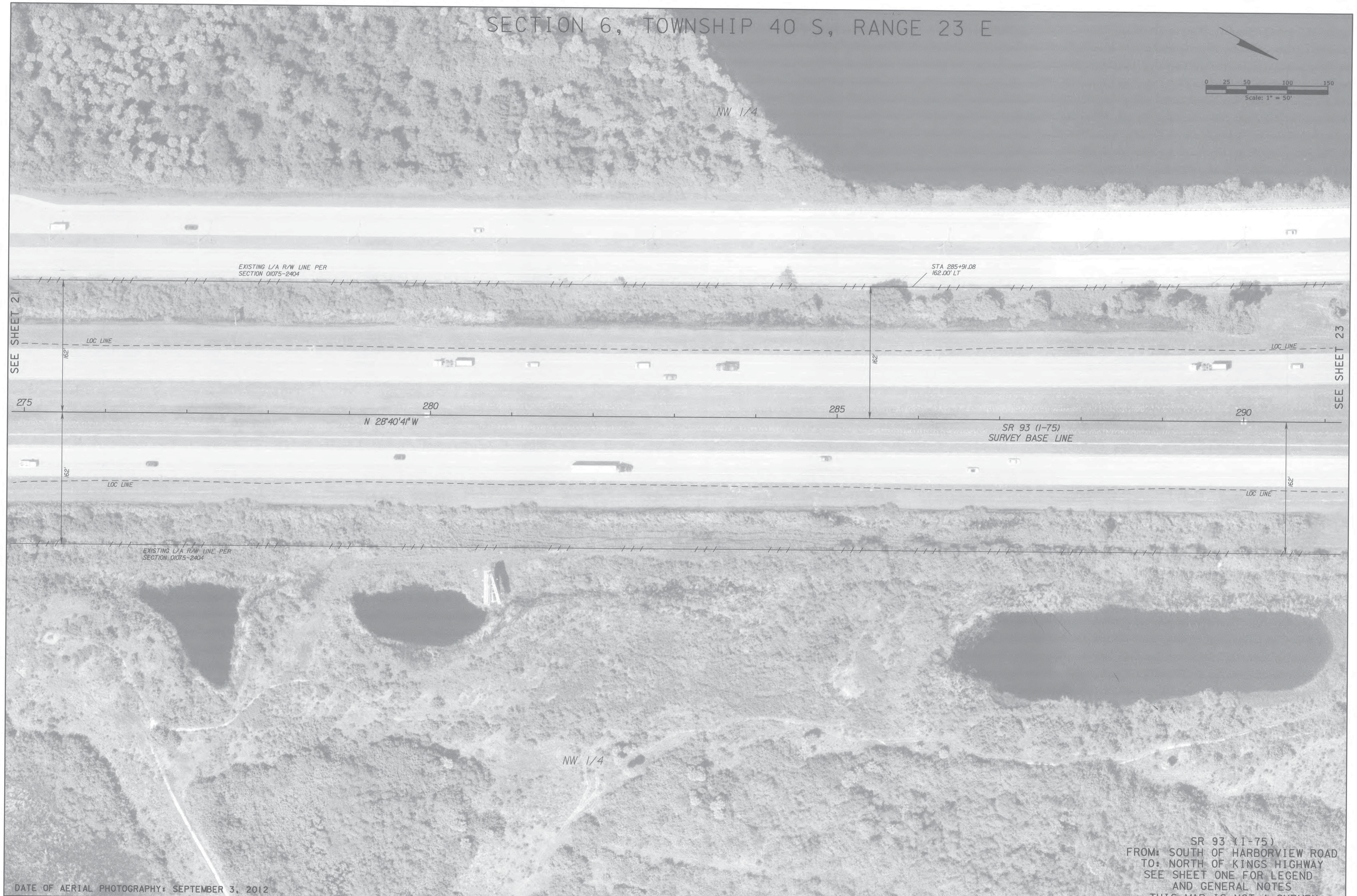


SR 93 (I-75)
FROM: SOUTH OF HARBORVIEW ROAD
TO: NORTH OF KINGS HIGHWAY
SEE SHEET ONE FOR LEGEND
AND GENERAL NOTES
THIS MAP IS NOT A SURVEY

RIGHT OF WAY MAP

FLORIDA DEPARTMENT OF TRANSPORTATION
SURVEYING AND MAPPING

APPROVED BY DATE
05-20-2014
FOR DISTRICT SECRETARY

| REVISION | BY | DATE | REVISION | BY | DATE |
|---|---|---|---|---|---|
| | | | | | |

| | BY | DATE |
|---|---|---|
| PRELIM | G. JONES | 5/14/13 |
| FINAL | G. JONES | 5/8/14 |
| CHECKED | D.S.Q.A. | 5/7/14 |

FA PROJ NO. N/A — SECTION 01075-000

STATE ROAD NO. 93 — CHARLOTTE COUNTY

MAPS PREPARED BY: McKIM & CREED, INC
WPI NO. N/A
FP ID 413043-2

FIELD BOOK NUMBERS: SEE SHEET ONE
SCALE: 1" = 50'

SHEET 22

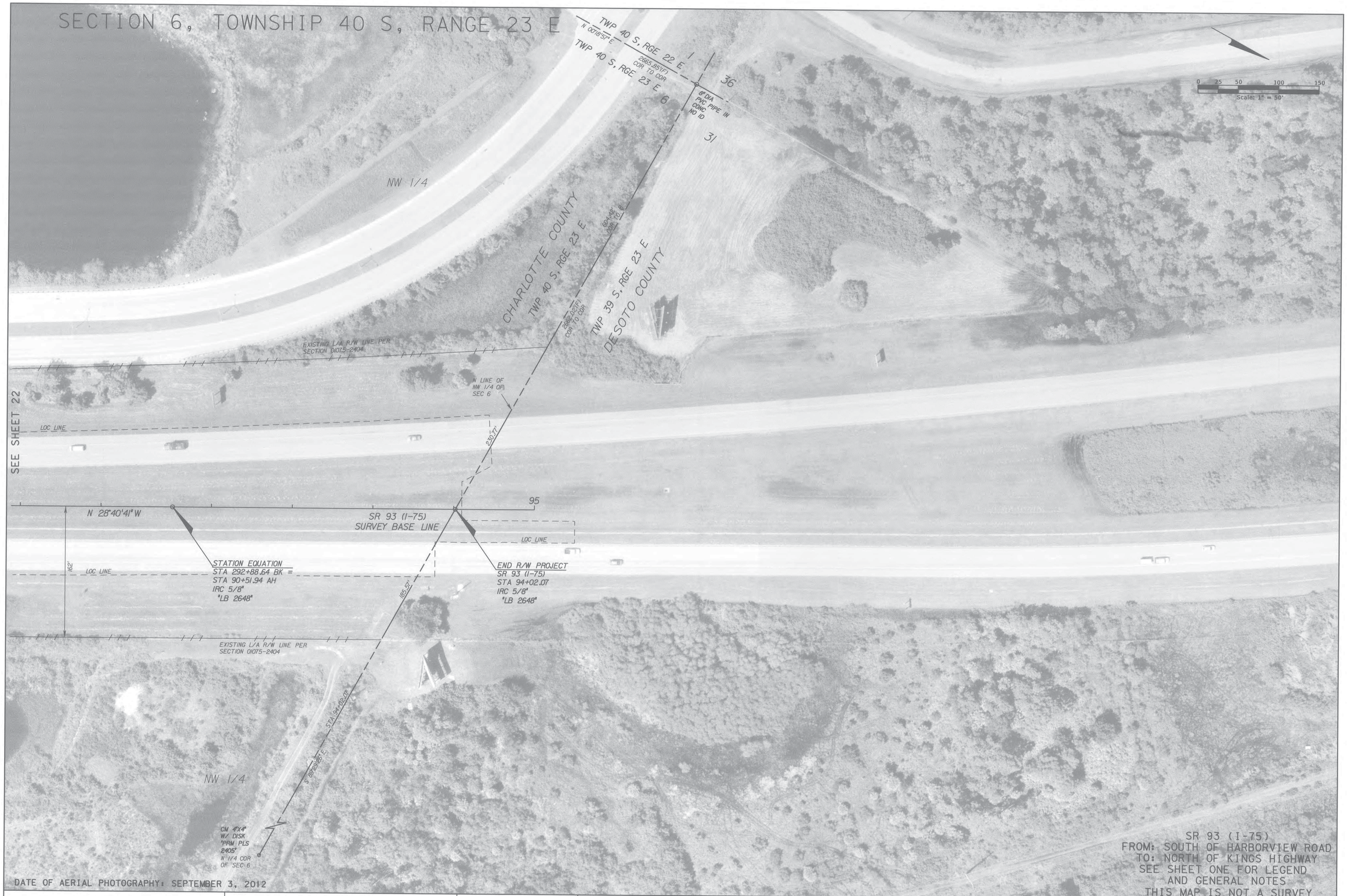


SR 93 (I-75)
FROM: SOUTH OF HARBORVIEW ROAD
TO: NORTH OF KINGS HIGHWAY
SEE SHEET ONE FOR LEGEND
AND GENERAL NOTES
THIS MAP IS NOT A SURVEY

RIGHT OF WAY MAP

FLORIDA DEPARTMENT OF TRANSPORTATION
SURVEYING AND MAPPING

APPROVED BY — DATE
05-20-2014
FOR DISTRICT SECRETARY

| REVISION | BY | DATE | REVISION | BY | DATE |
|---|---|---|---|---|---|
| | | | | | |

| | BY | DATE |
|---|---|---|
| PRELIM | G. JONES | 5/14/13 |
| FINAL | G. JONES | 5/8/14 |
| CHECKED | D.S.Q.A. | 5/7/14 |

FA PROJ NO. N/A — SECTION 01075-000

STATE ROAD NO. 93 — CHARLOTTE COUNTY

MAPS PREPARED BY: McKIM & CREED, INC

WPI NO. N/A

FP ID 413043-2

FIELD BOOK NUMBERS: SEE SHEET ONE

SCALE: 1" = 50'

SHEET 23

# SECTIONS 20 AND 21, TOWNSHIP 40 S, RANGE 23 E

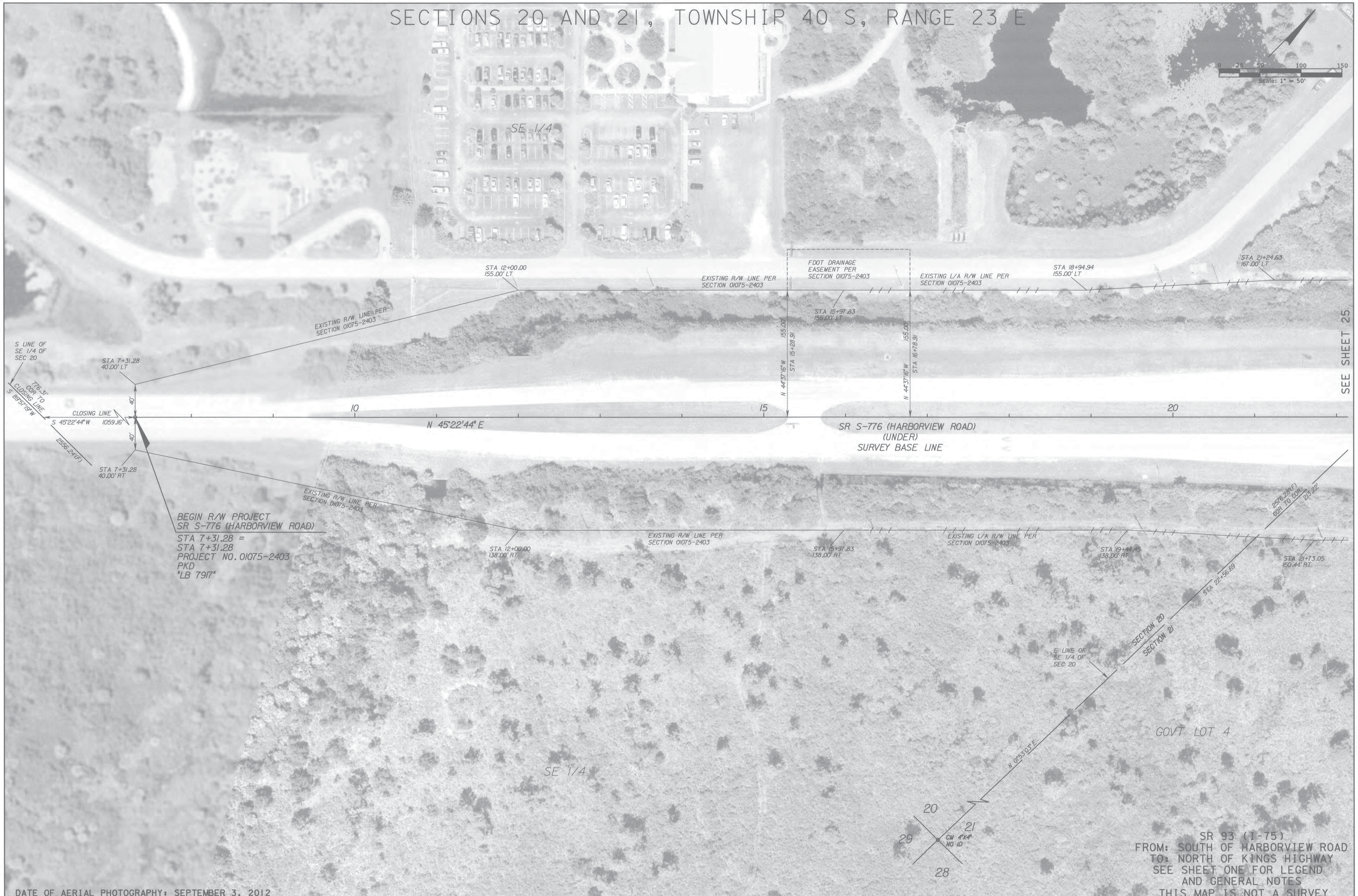


SR 93 (I-75)
FROM: SOUTH OF HARBORVIEW ROAD
TO: NORTH OF KINGS HIGHWAY
SEE SHEET ONE FOR LEGEND
AND GENERAL NOTES
THIS MAP IS NOT A SURVEY

DATE OF AERIAL PHOTOGRAPHY: SEPTEMBER 3, 2012

| | | | | | | | | | | | | | | | | |
|---|---|---|---|---|---|---|---|---|---|---|---|---|---|---|---|---|
| RIGHT OF WAY MAP | FLORIDA DEPARTMENT OF TRANSPORTATION<br>SURVEYING AND MAPPING | APPROVED BY DATE<br>05-20-2014<br>FOR DISTRICT SECRETARY | REVISION | BY | DATE | REVISION | BY | DATE | | BY | DATE | FA PROJ NO. N/A | SECTION 01075-000 | MAPS PREPARED BY<br>McKIM & CREED, INC | FIELD BOOK NUMBERS<br>SEE SHEET ONE |
| | | | | | | | | | PRELIM | G. JONES | 5/14/13 | | | WPI NO. N/A | SCALE: 1" = 50' |
| | | | | | | | | | FINAL | G. JONES | 5/8/14 | STATE ROAD NO. 93 | CHARLOTTE COUNTY | FP ID 413043-2 | SHEET 24 |
| | | | | | | | | | CHECKED | D.S.Q.A. | 5/7/14 | | | | |

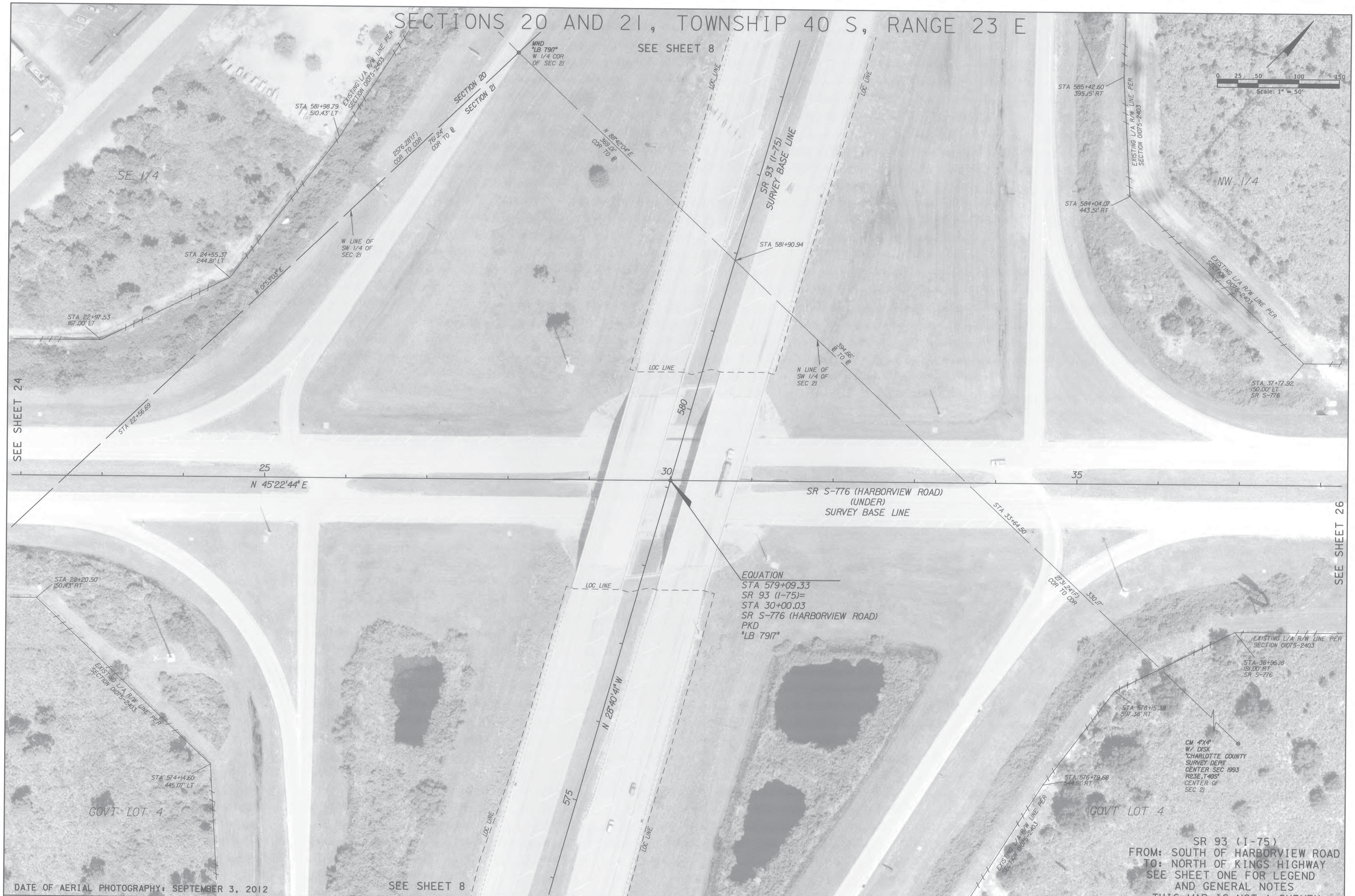


| RIGHT OF WAY MAP | FLORIDA DEPARTMENT OF TRANSPORTATION SURVEYING AND MAPPING | APPROVED BY / DATE: 05-20-2014 FOR DISTRICT SECRETARY | REVISION | BY | DATE | REVISION | BY | DATE |
|---|---|---|---|---|---|---|---|---|

| | BY | DATE |
|---|---|---|
| PRELIM | G. JONES | 5/14/13 |
| FINAL | G. JONES | 5/8/14 |
| CHECKED | D.S.Q.A. | 5/7/14 |

FA PROJ NO. N/A — SECTION 01075-000

STATE ROAD NO. 93 — CHARLOTTE COUNTY

MAPS PREPARED BY: McKIM & CREED, INC

WPI NO. N/A

FIELD BOOK NUMBERS: SEE SHEET ONE

SCALE: 1" = 50'

FP ID 413043-2

SHEET 25

RIGHT OF WAY MAP

FLORIDA DEPARTMENT OF TRANSPORTATION
SURVEYING AND MAPPING

APPROVED BY — DATE
05-20-2014
FOR DISTRICT SECRETARY

| REVISION | BY | DATE | REVISION | BY | DATE |
|---|---|---|---|---|---|
| | | | | | |

| | BY | DATE |
|---|---|---|
| PRELIM | G. JONES | 5/14/13 |
| FINAL | G. JONES | 5/8/14 |
| CHECKED | D.S.Q.A. | 5/7/14 |

FA PROJ NO. N/A — SECTION 01075-000

STATE ROAD NO. 93 — CHARLOTTE COUNTY

MAPS PREPARED BY: McKIM & CREED, INC
WPI NO. N/A
FP ID 413043-2

FIELD BOOK NUMBERS: SEE SHEET ONE
SCALE: 1" - 50'

SHEET 26

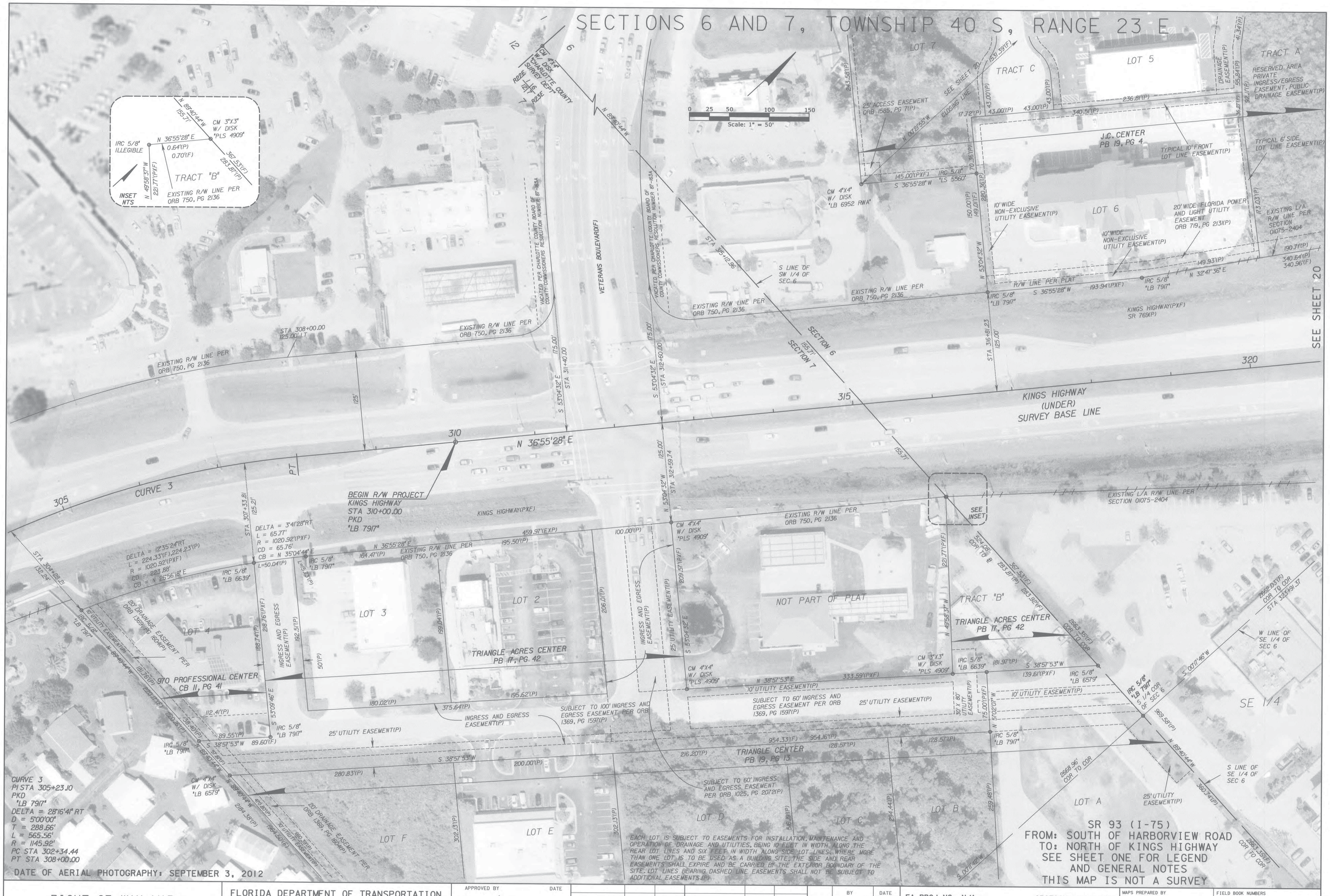


| RIGHT OF WAY MAP | FLORIDA DEPARTMENT OF TRANSPORTATION SURVEYING AND MAPPING | APPROVED BY / DATE — FOR DISTRICT SECRETARY (05-20-2014) | REVISION / BY / DATE | REVISION / BY / DATE |
|---|---|---|---|---|

| | BY | DATE |
|---|---|---|
| PRELIM | G. JONES | 5/14/13 |
| FINAL | G. JONES | 5/8/14 |
| CHECKED | D.S.Q.A. | 5/7/14 |

| | | | |
|---|---|---|---|
| FA PROJ NO. N/A | SECTION 01075-000 | MAPS PREPARED BY McKIM & CREED, INC | FIELD BOOK NUMBERS SEE SHEET ONE |
| STATE ROAD NO. 93 | CHARLOTTE COUNTY | WPI NO. N/A | SCALE: 1" = 50' |
| | | FP ID 413043-2 | SHEET 27 |

NOTE
TRACT "A" IS FOR PRIVATE ROADWAY, STORMWATER DRAINAGE, LANDSCAPE AND MAINTENANCE PURPOSES FOR THE USE OF THE OWNERS OF THE PROPERTY IN SANDHILL COMMONS SUBDIVISION(P)

| RIGHT OF WAY MAP | FLORIDA DEPARTMENT OF TRANSPORTATION SURVEYING AND MAPPING | APPROVED BY / DATE: 05-20-2014 — FOR DISTRICT SECRETARY | REVISION / BY / DATE | REVISION / BY / DATE |
|---|---|---|---|---|

| | BY | DATE |
|---|---|---|
| PRELIM | G. JONES | 5/14/13 |
| FINAL | G. JONES | 5/8/14 |
| CHECKED | D.S.Q.A. | 5/7/14 |

| | | | |
|---|---|---|---|
| FA PROJ NO. N/A | SECTION 01075-000 | MAPS PREPARED BY McKIM & CREED, INC | FIELD BOOK NUMBERS SEE SHEET ONE |
| STATE ROAD NO. 93 | CHARLOTTE COUNTY | WPI NO. N/A | SCALE: 1" = 50' |
| | | FP ID 413043-2 | SHEET 28 |

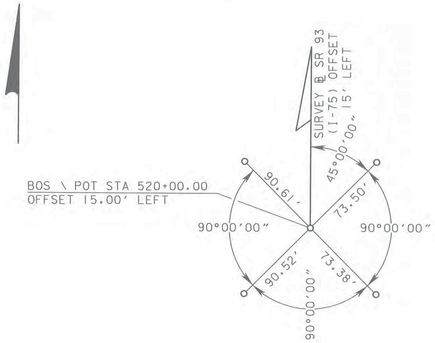


BEGIN ALIGNMENT \ POT STA 520+00.00
UNABLE TO OCCUPY OR SET BASE LINE
POINT, FALLS IN BRIGDE TRAVEL LANE
OFFSET 15.00' LEFT
SURVEY BASE LINE SR 93 (I-75)

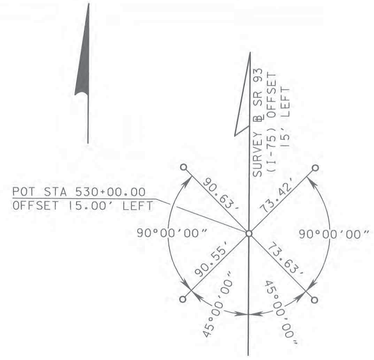


POT STA 530+00.00
UNABLE TO OCCUPY OR SET BASE LINE
POINT, FALLS IN BRIGDE TRAVEL LANE
OFFSET 15.00' LEFT
SURVEY BASE LINE SR 93 (I-75)

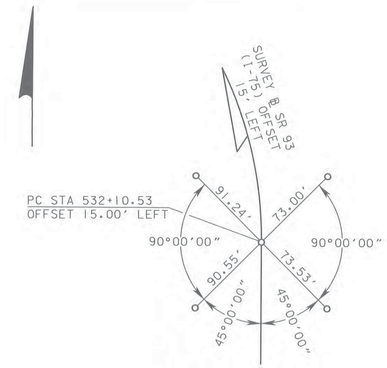


PC STA 532+10.53
UNABLE TO OCCUPY OR SET BASE LINE
POINT, FALLS IN BRIGDE TRAVEL LANE
OFFSET 15.00' LEFT
SURVEY BASE LINE SR 93 (I-75)

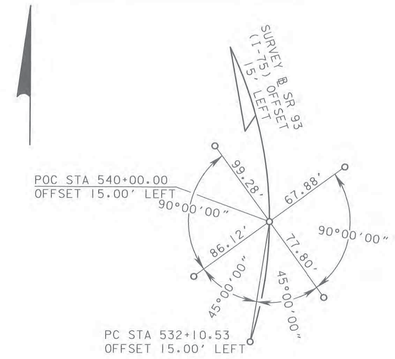


POC STA 540+00.00
UNABLE TO OCCUPY OR SET BASE LINE
POINT, FALLS IN BRIGDE TRAVEL LANE
OFFSET 15.00' LEFT
SURVEY BASE LINE SR 93 (I-75)

PI STA 548+79.47
UNABLE TO SET OR REFERENCE
FALL IN WETLANDS
SURVEY BASE LINE SR 93 (I-75)

POC STA 550+00.00
UNABLE TO OCCUPY OR SET BASE LINE
POINT, FALLS IN BRIGDE TRAVEL LANE
OFFSET 15.00' LEFT
SURVEY BASE LINE SR 93 (I-75)

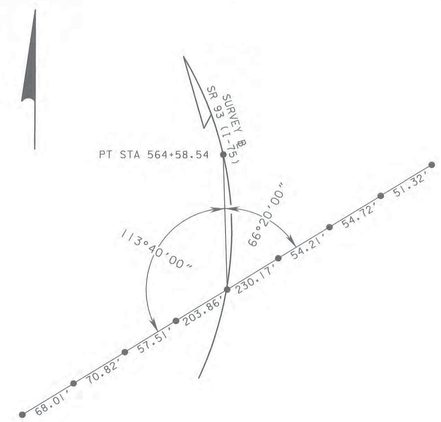


POC STA 561+00.00
SURVEY BASE LINE SR 93 (I-75)

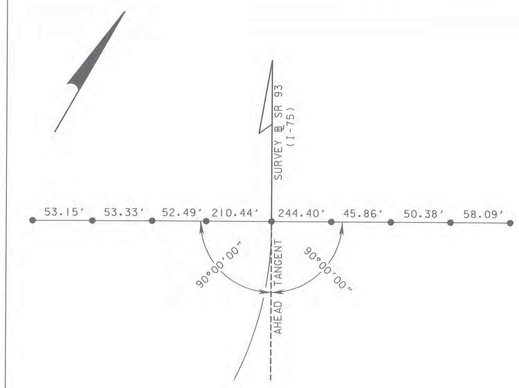


PT STA 564+58.54
SURVEY BASE LINE SR 93 (I-75)

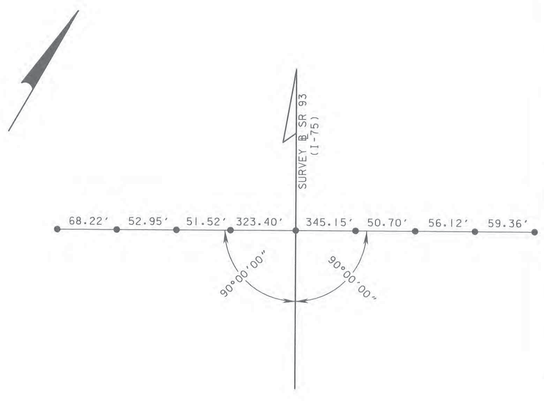


POT STA 570+00.00
SURVEY BASE LINE SR 93 (I-75)

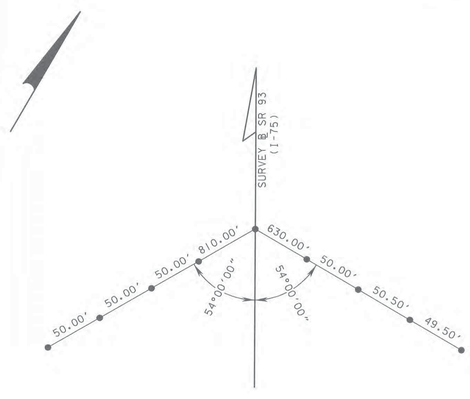


POT STA 580+00.00
SURVEY BASE LINE SR 93 (I-75)

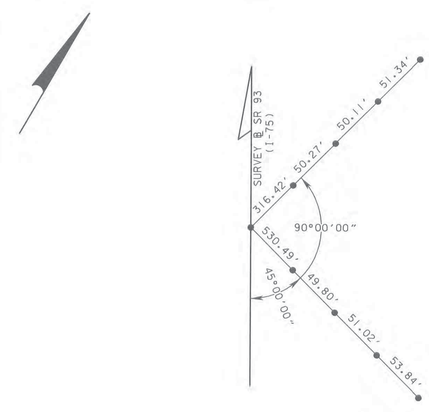


POT STA 590+00.00
SURVEY BASE LINE SR 93 (I-75)

*LEGEND*

● = *SET 5/8" IRON ROD AND CAP "LB 7917"*
*(UNLESS OTHERWISE NOTED)*

○ = *SET PK NAIL AND DISK "LB 7917"*
*(UNLESS OTHERWISE NOTED)*

= *DENOTES SURVEY ℄*

REFERENCE SHEET
SR 93 (I-75)
FROM: SOUTH OF HARBORVIEW ROAD
TO: NORTH OF KINGS HIGHWAY
SEE SHEET ONE FOR LEGEND
AND GENERAL NOTES
THIS MAP IS NOT A SURVEY

| | | | | | | | | | | | | | | | |
|---|---|---|---|---|---|---|---|---|---|---|---|---|---|---|---|
| RIGHT OF WAY MAP | FLORIDA DEPARTMENT OF TRANSPORTATION SURVEYING AND MAPPING | APPROVED BY | DATE | REVISION | BY | DATE | REVISION | BY | DATE | | BY | DATE | FA PROJ NO. N/A | SECTION 01075-000 | MAPS PREPARED BY McKIM & CREED, INC | FIELD BOOK NUMBERS SEE SHEET ONE |
| | | | | | | | | | | PRELIM | G. JONES | 5/14/13 | | | WPI NO. N/A | SCALE: NTS |
| | | FOR DISTRICT SECRETARY | | | | | | | | FINAL | G. JONES | 5/8/14 | STATE ROAD NO. 93 | CHARLOTTE COUNTY | FP ID 413043-2 | SHEET 29 |
| | | | | | | | | | | CHECKED | D.S.O.A. | 5/7/14 | | | | |

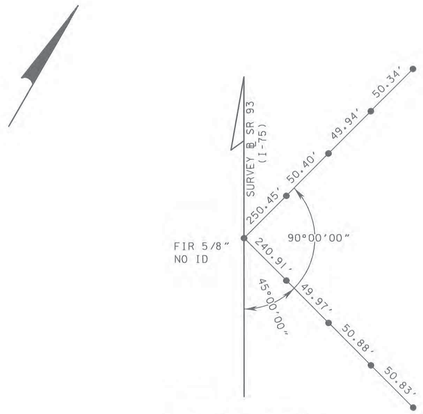


EQUATION STATION
POT STA 598+93.57 (BK) =
POT STA 100+00.00 (AH)
SURVEY BASE LINE SR 93 (I-75)

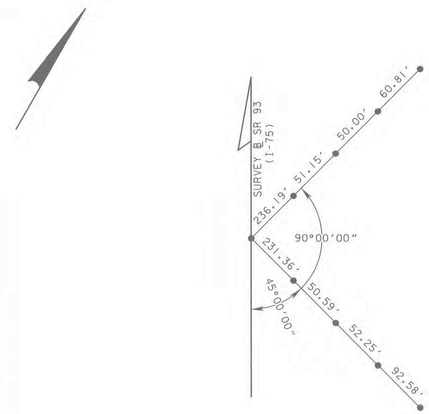


POT STA 110+00.00
SURVEY BASE LINE SR 93 (I-75)

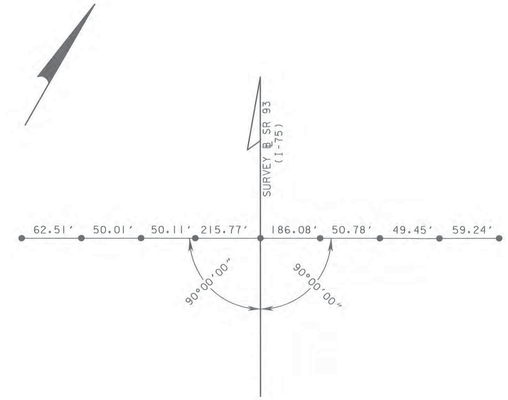


POT STA 120+00.00
SURVEY BASE LINE SR 93 (I-75)

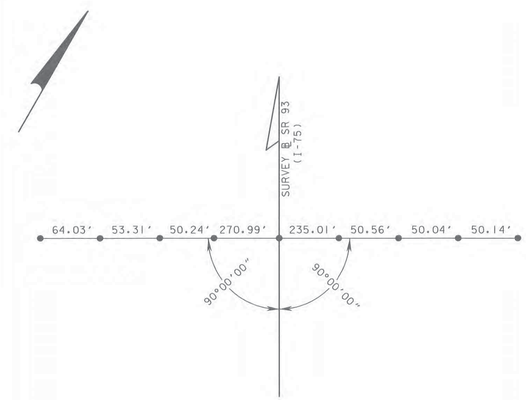


POT STA 130+00.00
SURVEY BASE LINE SR 93 (I-75)

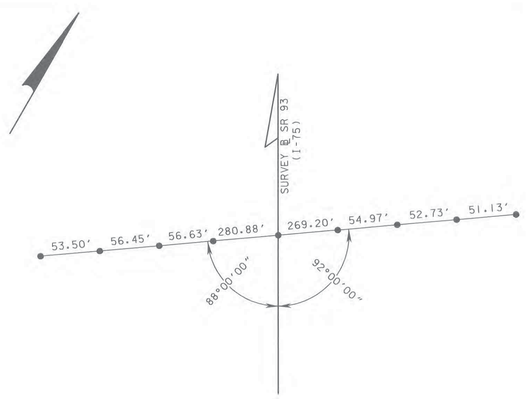


POT STA 140+00.00
SURVEY BASE LINE SR 93 (I-75)

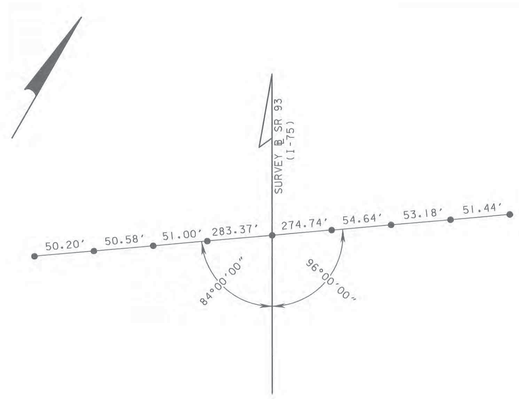


POT STA 150+00.00
SURVEY BASE LINE SR 93 (I-75)

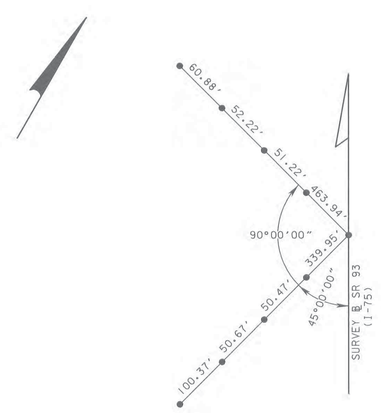


POT STA 160+00.00
SURVEY BASE LINE SR 93 (I-75)

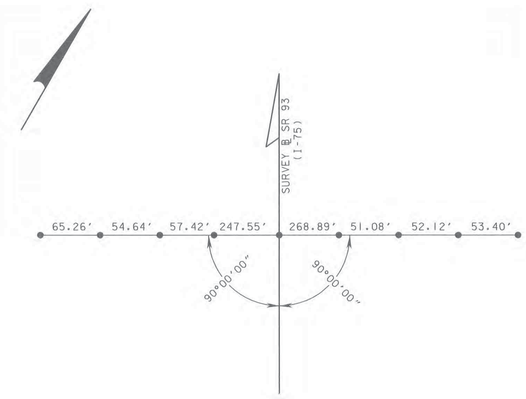


POT STA 170+00.00
SURVEY BASE LINE SR 93 (I-75)

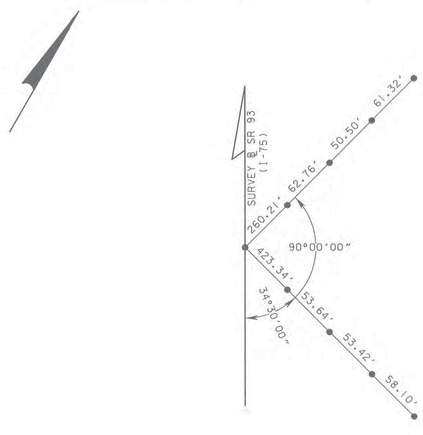


POT STA 180+00.00
SURVEY BASE LINE SR 93 (I-75)

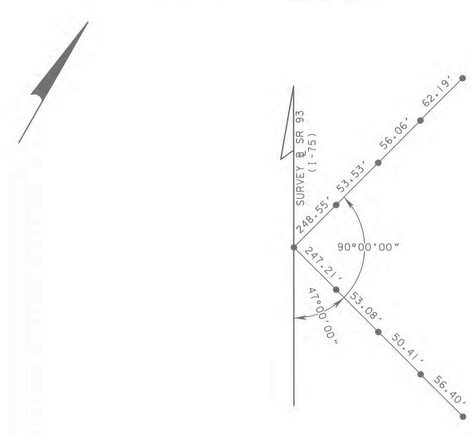


POT STA 190+00.00
SURVEY BASE LINE SR 93 (I-75)

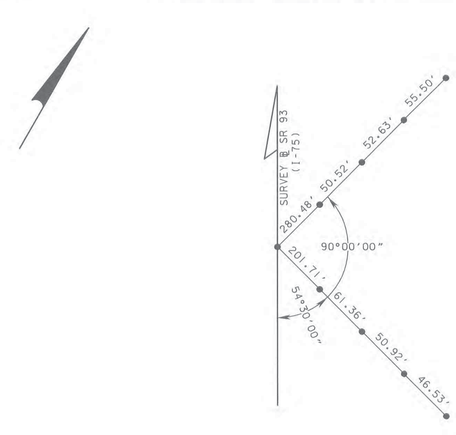


POT STA 200+00.00
SURVEY BASE LINE SR 93 (I-75)

*LEGEND*

● = *SET 5/8" IRON ROD AND CAP "LB 7917" (UNLESS OTHERWISE NOTED)*

○ = *SET PK NAIL AND DISK "LB 7917" (UNLESS OTHERWISE NOTED)*

= *DENOTES SURVEY ℄*

REFERENCE SHEET
SR 93 (I-75)
FROM: SOUTH OF HARBORVIEW ROAD
TO: NORTH OF KINGS HIGHWAY
SEE SHEET ONE FOR LEGEND
AND GENERAL NOTES
THIS MAP IS NOT A SURVEY

| | | | | | | | | | | | | | | | | | |
|---|---|---|---|---|---|---|---|---|---|---|---|---|---|---|---|---|---|
| RIGHT OF WAY MAP | FLORIDA DEPARTMENT OF TRANSPORTATION SURVEYING AND MAPPING | APPROVED BY | DATE | | | | | | | | BY | DATE | FA PROJ NO. N/A | SECTION 01075-000 | MAPS PREPARED BY MCKIM & CREED, INC | FIELD BOOK NUMBERS SEE SHEET ONE |
| | | FOR DISTRICT SECRETARY | 05-20-2014 | REVISION | BY | DATE | REVISION | BY | DATE | PRELIM | G. JONES | 5/14/13 | | | WPI NO. N/A | SCALE: NTS |
| | | | | | | | | | | FINAL | G. JONES | 5/8/14 | STATE ROAD NO. 93 | CHARLOTTE COUNTY | FP ID 413043-2 | SHEET 30 |
| | | | | | | | | | | CHECKED | D.S.Q.A. | 5/7/14 | | | | |

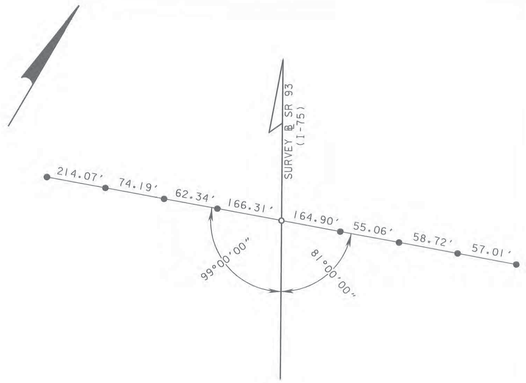


POT STA 210+00.00
SURVEY BASE LINE SR 93 (I-75)

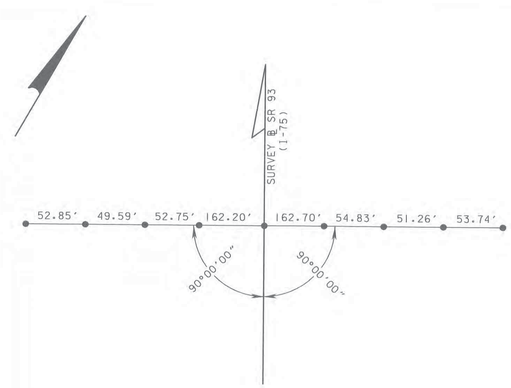


POT STA 220+00.00
SURVEY BASE LINE SR 93 (I-75)

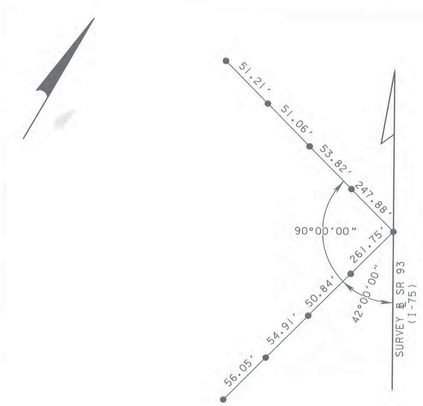


POT STA 230+00.00
SURVEY BASE LINE SR 93 (I-75)

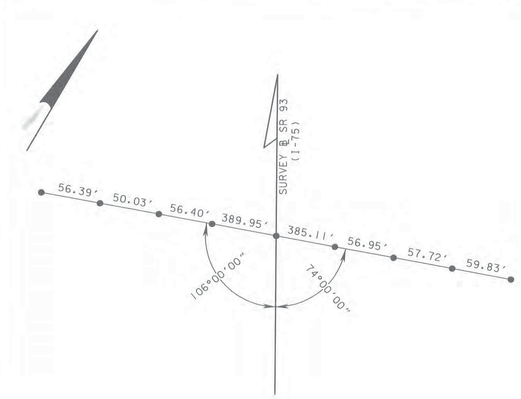


POT STA 240+00.00
SURVEY BASE LINE SR 93 (I-75)

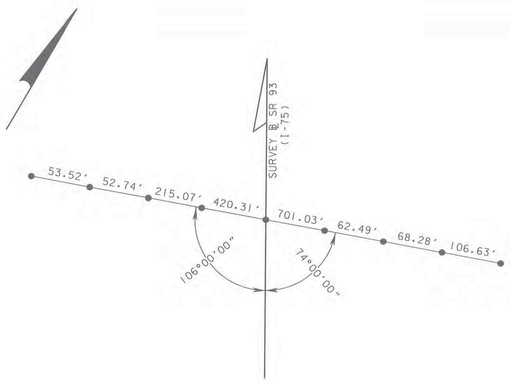


POT STA 250+00.00
SURVEY BASE LINE SR 93 (I-75)

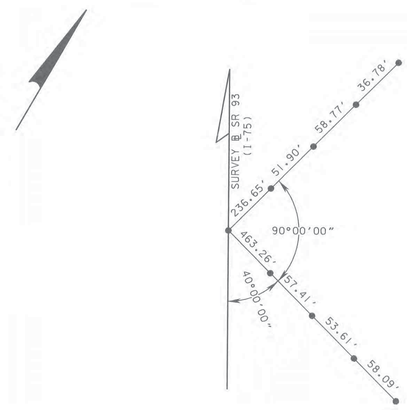


POT STA 260+00.00
SURVEY BASE LINE SR 93 (I-75)

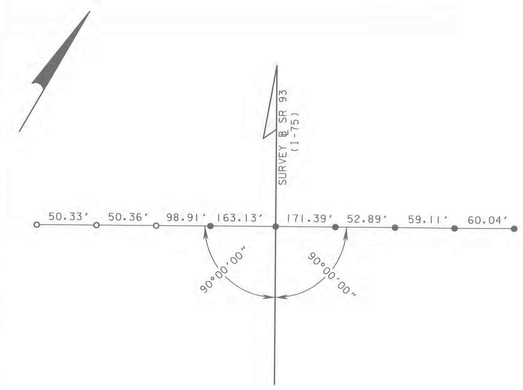


POT STA 270+00.00
SURVEY BASE LINE SR 93 (I-75)

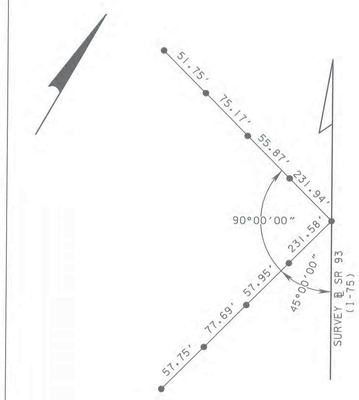


POT STA 280+00.00
SURVEY BASE LINE SR 93 (I-75)

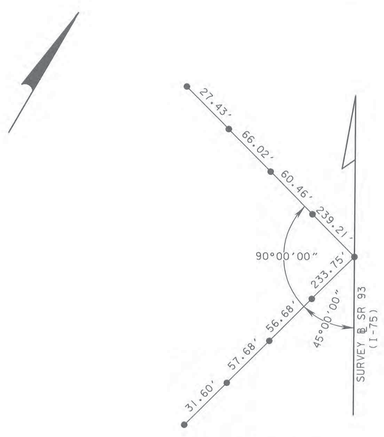


POT STA 289+00.00
SURVEY BASE LINE SR 93 (I-75)

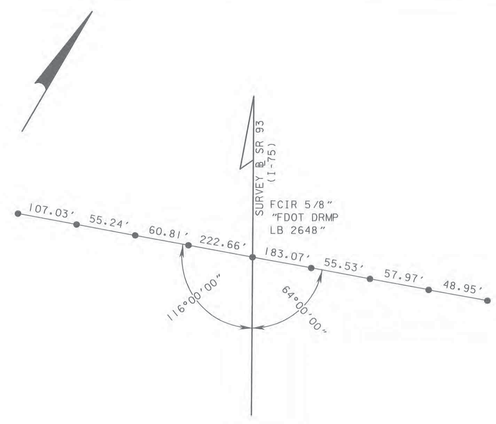


EQUATION STATION
POT STA 292+88.64 (BK) =
POT STA 90+51.94 (AH)
SURVEY BASE LINE SR 93 (I-75)

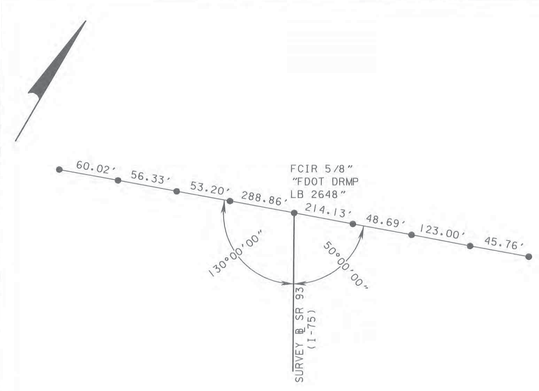


EOS \ POT STA 94+02.07
SURVEY BASE LINE SR 93 (I-75)

*LEGEND*

● = *SET 5/8" IRON ROD AND CAP "LB 7917" (UNLESS OTHERWISE NOTED)*

○ = *SET PK NAIL AND DISK "LB 7917" (UNLESS OTHERWISE NOTED)*

= *DENOTES SURVEY ℄*

REFERENCE SHEET
SR 93 (I-75)
FROM: SOUTH OF HARBORVIEW ROAD
TO: NORTH OF KINGS HIGHWAY
SEE SHEET ONE FOR LEGEND
AND GENERAL NOTES
THIS MAP IS NOT A SURVEY

| RIGHT OF WAY MAP | FLORIDA DEPARTMENT OF TRANSPORTATION SURVEYING AND MAPPING | APPROVED BY / DATE: 05-20-2014 FOR DISTRICT SECRETARY | REVISION / BY / DATE / REVISION / BY / DATE | | BY | DATE | FA PROJ NO. N/A | SECTION 01075-000 | MAPS PREPARED BY McKIM & CREED, INC | FIELD BOOK NUMBERS SEE SHEET ONE |
|---|---|---|---|---|---|---|---|---|---|---|
| | | | | PRELIM | G. JONES | 5/14/13 | | | WPI NO. N/A | SCALE: NTS |
| | | | | FINAL | G. JONES | 5/8/14 | STATE ROAD NO. 93 | CHARLOTTE COUNTY | FP ID 413043-2 | SHEET 31 |
| | | | | CHECKED | D.S.Q.A. | 5/7/14 | | | | |

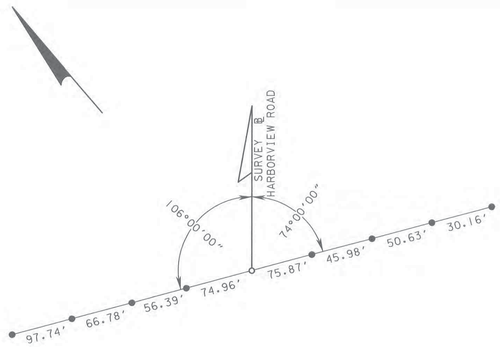


BOS \ POT STA 7+31.28
SURVEY BASE LINE HARBORVIEW ROAD

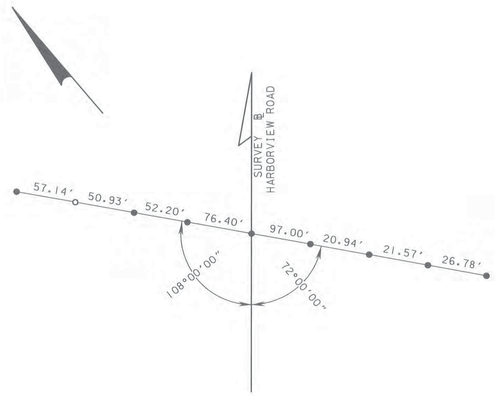


POT STA 10+00.00
SURVEY BASE LINE HARBORVIEW ROAD

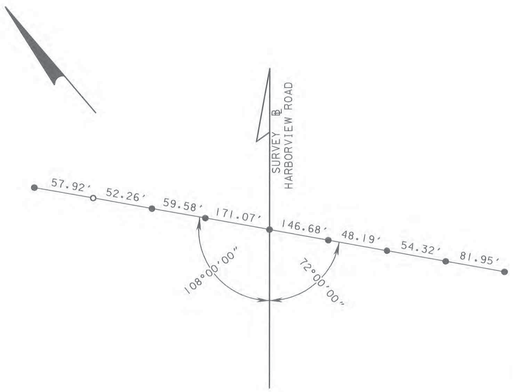


POT STA 20+00.00
SURVEY BASE LINE HARBORVIEW ROAD

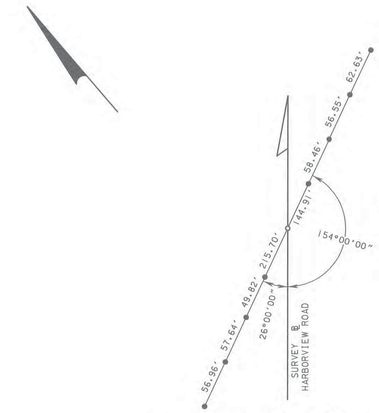


EQUATION STATION
POT STA 30+00.03 (HARBORVIEW ROAD) =
POT STA 579+09.33 (I-75)
SURVEY BASE LINE HARBORVIEW ROAD

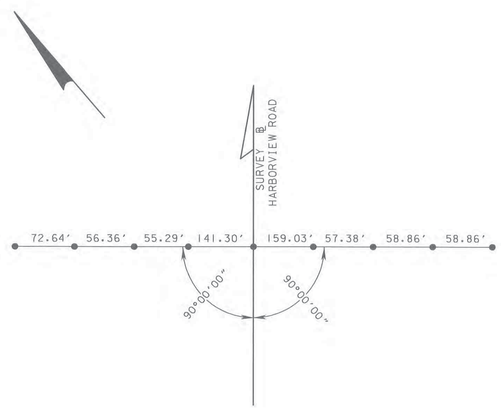


POT STA 40+00.00
SURVEY BASE LINE HARBORVIEW ROAD

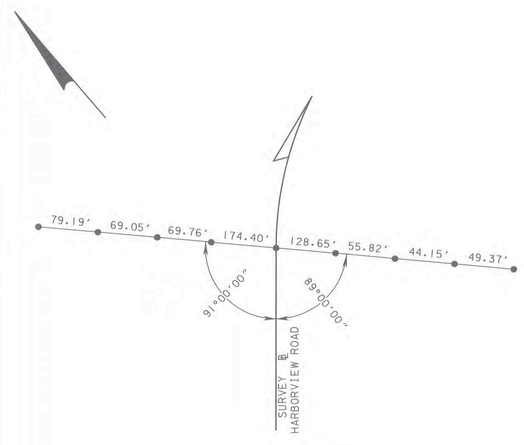


PC STA 50+37.39
SURVEY BASE LINE HARBORVIEW ROAD

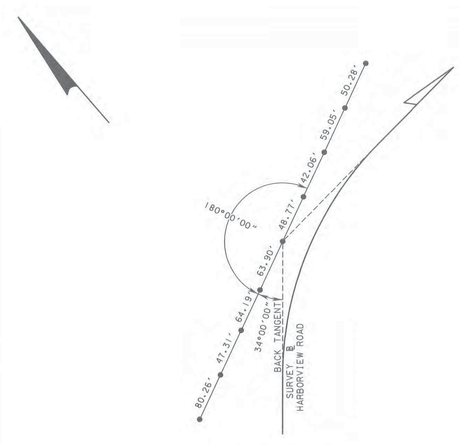


PI STA 54+74.67
SURVEY BASE LINE HARBORVIEW ROAD

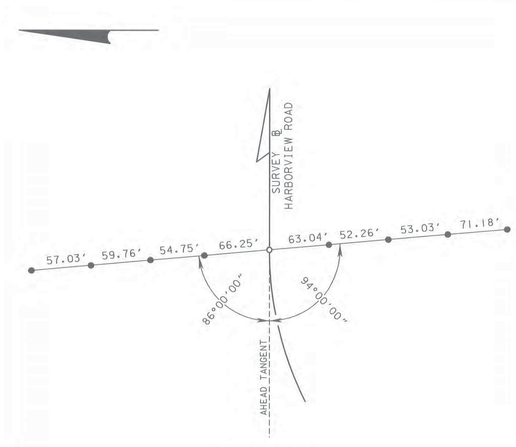


PT STA 58+65.42
SURVEY BASE LINE HARBORVIEW ROAD

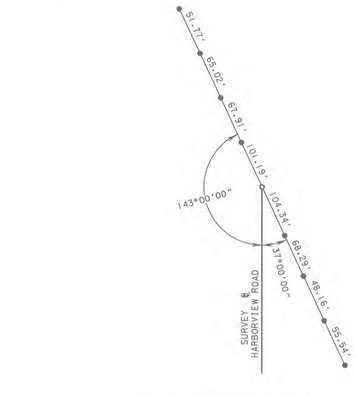


END ALIGNMENT \ POT STA 60+00.00
SURVEY BASE LINE HARBORVIEW ROAD

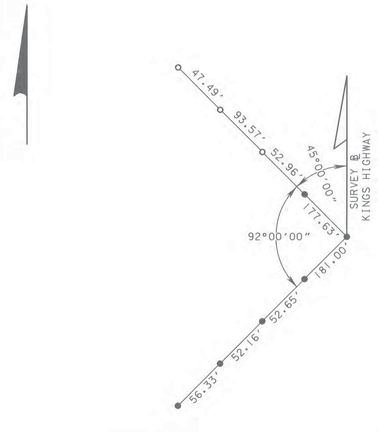


BEGIN ALIGNMENT \ POT STA 298+70.00
SURVEY BASE LINE KINGS HIGHWAY

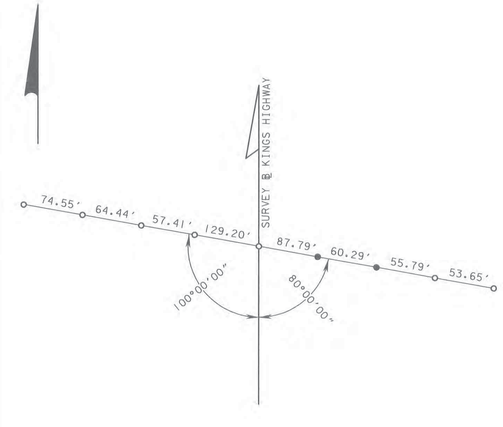


POT STA 300+00.00
SURVEY BASE LINE KINGS HIGHWAY

*LEGEND*

- ● = *SET 5/8" IRON ROD AND CAP "LB 7917" (UNLESS OTHERWISE NOTED)*
- ○ = *SET PK NAIL AND DISK "LB 7917" (UNLESS OTHERWISE NOTED)*
- = *DENOTES SURVEY ℄*

REFERENCE SHEET
SR 93 (I-75)
FROM: SOUTH OF HARBORVIEW ROAD
TO: NORTH OF KINGS HIGHWAY
SEE SHEET ONE FOR LEGEND
AND GENERAL NOTES
THIS MAP IS NOT A SURVEY

| | | | | | | | | | | | | | | | | | |
|---|---|---|---|---|---|---|---|---|---|---|---|---|---|---|---|---|---|
| RIGHT OF WAY MAP | FLORIDA DEPARTMENT OF TRANSPORTATION SURVEYING AND MAPPING | APPROVED BY | DATE | | | | | | | BY | DATE | FA PROJ NO. N/A | SECTION 01075-000 | MAPS PREPARED BY McKIM & CREED, INC | FIELD BOOK NUMBERS SEE SHEET ONE |
| | | FOR DISTRICT SECRETARY | 05-20-2014 | REVISION | BY | DATE | REVISION | BY | DATE | PRELIM | G. JONES | 5/14/13 | | | |
| | | | | | | | | | | FINAL | G. JONES | 5/8/14 | | WPI NO. N/A | SCALE: NTS |
| | | | | | | | | | | CHECKED | D.S.Q.A. | 5/7/14 | STATE ROAD NO. 93 | CHARLOTTE COUNTY | FP ID 413043-2 | SHEET 32 |

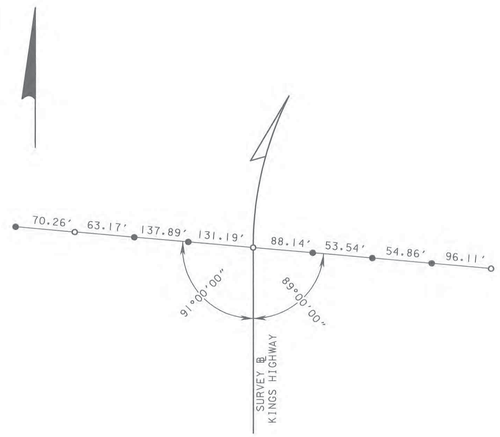


PC STA 302+34.44
SURVEY BASE LINE KINGS HIGHWAY

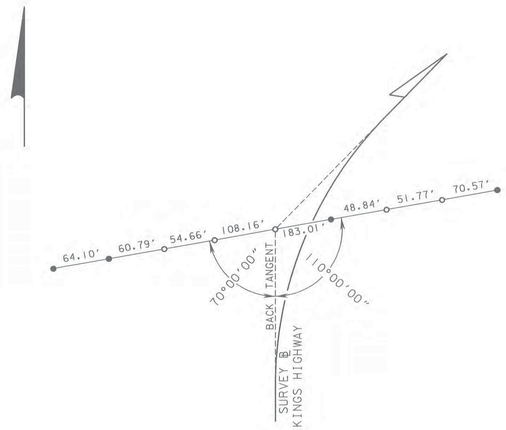


PI STA 305+23.10
SURVEY BASE LINE KINGS HIGHWAY

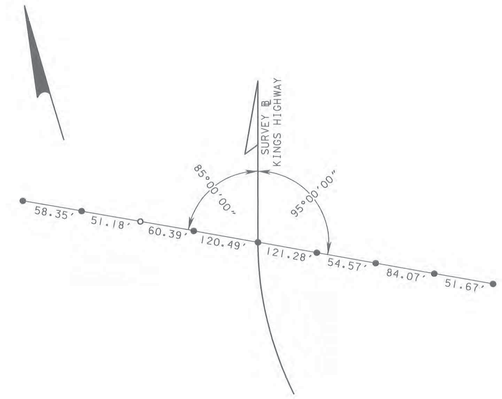


PT STA 308+00.00
SURVEY BASE LINE KINGS HIGHWAY

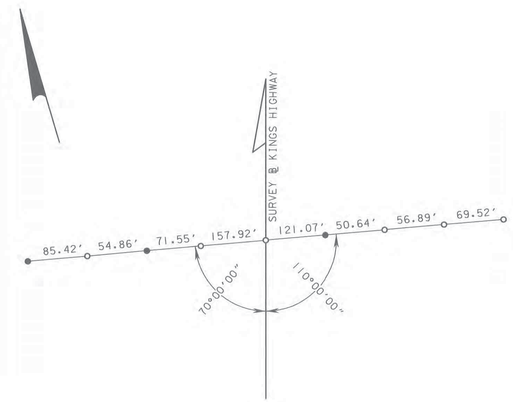


BOS / POT STA 310+00.00
SURVEY BASE LINE KINGS HIGHWAY

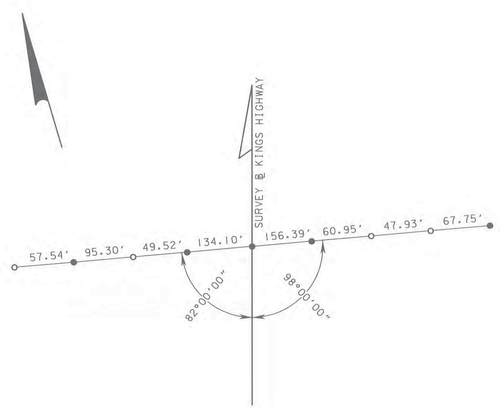


POT STA 320+00.00
SURVEY BASE LINE KINGS HIGHWAY

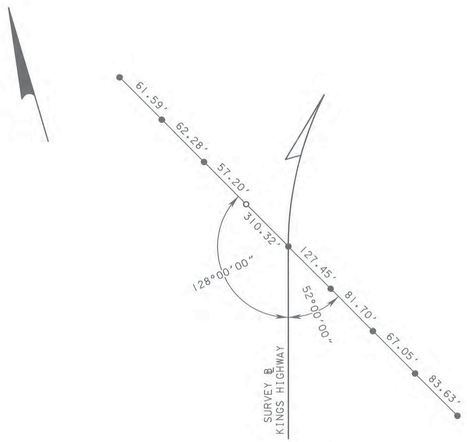


PC STA 324+39.80
SURVEY BASE LINE KINGS HIGHWAY

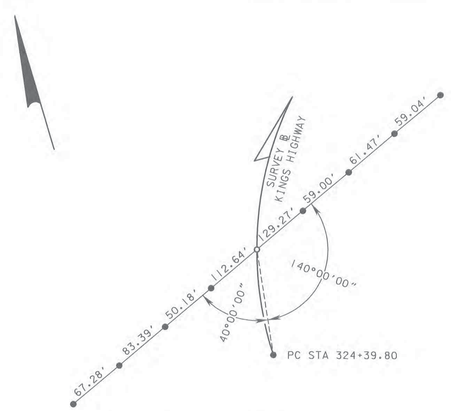


EQUATION STATION
POC STA 328+72.89 (KINGS HIGHWAY) =
POT STA 247+89.21 (I-75)
SURVEY BASE LINE KINGS HIGHWAY

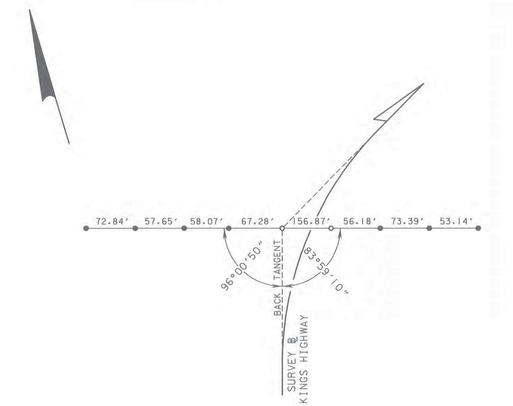


PI STA 333+42.69
SURVEY BASE LINE KINGS HIGHWAY

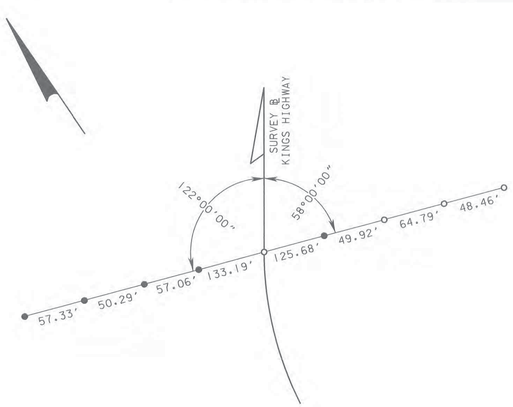


EQUATION STATION
PT STA 342+43.93 (BK) =
PT STA 342+91.53 (AH)
SURVEY BASE LINE KINGS HIGHWAY

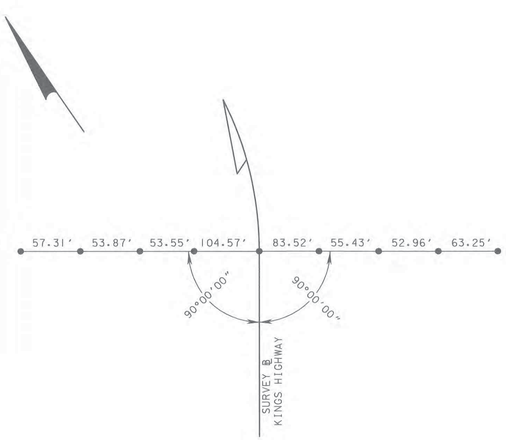


PC STA 349+01.90
SURVEY BASE LINE KINGS HIGHWAY

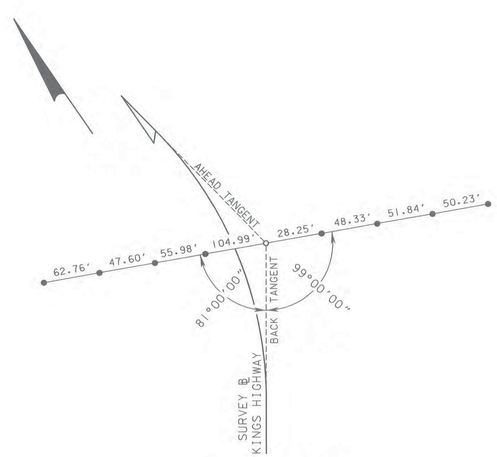


PI STA 351+94.25
SURVEY BASE LINE KINGS HIGHWAY

*LEGEND*

- ● = *SET 5/8" IRON ROD AND CAP "LB 7917" (UNLESS OTHERWISE NOTED)*
- ○ = *SET PK NAIL AND DISK "LB 7917" (UNLESS OTHERWISE NOTED)*
- = *DENOTES SURVEY ℄*

REFERENCE SHEET
SR 93 (I-75)
FROM: SOUTH OF HARBORVIEW ROAD
TO: NORTH OF KINGS HIGHWAY
SEE SHEET ONE FOR LEGEND
AND GENERAL NOTES
THIS MAP IS NOT A SURVEY

| | | | | | | | | | | | | | | | | | |
|---|---|---|---|---|---|---|---|---|---|---|---|---|---|---|---|---|---|
| RIGHT OF WAY MAP | FLORIDA DEPARTMENT OF TRANSPORTATION SURVEYING AND MAPPING | APPROVED BY | DATE | | | | | | | BY | DATE | FA PROJ NO. N/A | SECTION 01075-000 | MAPS PREPARED BY McKIM & CREED, INC | FIELD BOOK NUMBERS SEE SHEET ONE |
| | | | | | | | | | PRELIM | G. JONES | 5/14/13 | | | | |
| | | | | | | | | | FINAL | G. JONES | 5/8/14 | | | WPI NO. N/A | SCALE: NTS |
| | | FOR DISTRICT SECRETARY | | REVISION | BY | DATE | REVISION | BY | DATE | CHECKED | D.S.Q.A. | 5/7/14 | STATE ROAD NO. 93 | CHARLOTTE COUNTY | FP ID 413043-2 | SHEET 33 |

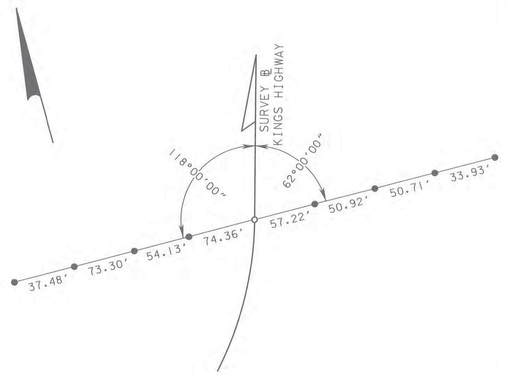


PT STA 354+82.10
SURVEY BASE LINE KINGS HIGHWAY

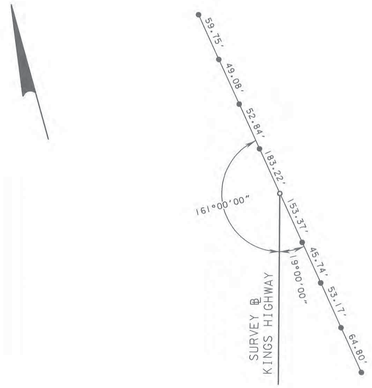


END ALIGNMENT \ POT STA 355+00.00
SURVEY BASE LINE KINGS HIGHWAY

EAST QUARTER CORNER OF
SECTION 20, TOWNSHIP 40 SOUTH, RANGE 23 EAST

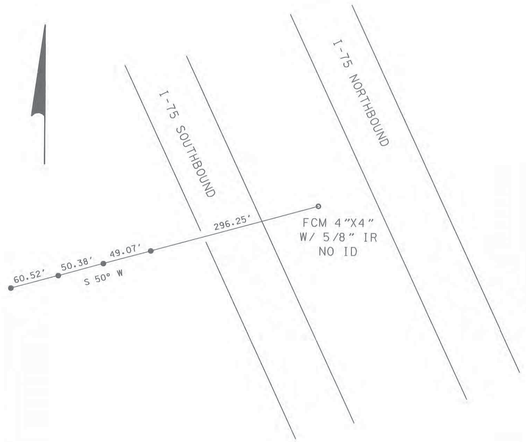


CENTER OF SECTION 17,
TOWNSHIP 40 SOUTH, RANGE 23 EAST

*LEGEND*

● = *SET 5/8" IRON ROD AND CAP "LB 7917" (UNLESS OTHERWISE NOTED)*

○ = *SET PK NAIL AND DISK "LB 7917" (UNLESS OTHERWISE NOTED)*

= *DENOTES SURVEY ℄*

REFERENCE SHEET
SR 93 (I-75)
FROM: SOUTH OF HARBORVIEW ROAD
TO: NORTH OF KINGS HIGHWAY
SEE SHEET ONE FOR LEGEND
AND GENERAL NOTES
THIS MAP IS NOT A SURVEY

| RIGHT OF WAY MAP | FLORIDA DEPARTMENT OF TRANSPORTATION SURVEYING AND MAPPING | APPROVED BY / DATE: 05-20-2014 FOR DISTRICT SECRETARY | REVISION | BY | DATE | REVISION | BY | DATE |
|---|---|---|---|---|---|---|---|---|

| | BY | DATE |
|---|---|---|
| PRELIM | G. JONES | 5/14/13 |
| FINAL | G. JONES | 5/8/14 |
| CHECKED | D.S.Q.A. | 5/7/14 |

FA PROJ NO. N/A — SECTION 01075-000
STATE ROAD NO. 93 — CHARLOTTE COUNTY

MAPS PREPARED BY: McKIM & CREED, INC
WPI NO. N/A
FIELD BOOK NUMBERS: SEE SHEET ONE
SCALE: NTS
FP ID 413043-2
SHEET 34

# TABLE OF OWNERSHIPS

| PARCEL NO. | SHEET NO. | NAME | AREA TAKEN | REMAINDERS LEFT | REMAINDERS RIGHT | COMMENTS | RECORDING DATA |
|---|---|---|---|---|---|---|---|

| REVISION | BY | DATE |
|---|---|---|

## LEGEND

| PARCEL NUMBER IDENTIFICATION | TYPE USE |
|---|---|
| 100-699 | DEEDS OF ALL TYPES |
| 700-799 | TEMPORARY EASEMENTS |
| 800-899 | PERPETUAL EASEMENTS |
| 900-999 | LICENSE AGREEMENTS |

RIGHT OF WAY MAP

FLORIDA DEPARTMENT OF TRANSPORTATION
SURVEYING AND MAPPING

APPROVED BY DATE
05-20-2014
FOR DISTRICT SECRETARY

| REVISION | BY | DATE | REVISION | BY | DATE |
|---|---|---|---|---|---|

| | BY | DATE |
|---|---|---|
| PRELIM | G. JONES | 5/14/13 |
| FINAL | G. JONES | 5/8/14 |
| CHECKED | D.S.Q.A. | 5/7/14 |

FA PROJ NO. N/A
SECTION 01075-000
STATE ROAD NO. 93
CHARLOTTE COUNTY

MAPS PREPARED BY
McKIM & CREED, INC
WPI NO. N/A

FIELD BOOK NUMBERS
SEE SHEET ONE
SCALE: N/A

FP ID 413043-2

SHEET 35