FLORIDA DEPARTMENT OF TRANSPORTATION
DISTRICT ONE VERTICAL CONTROL SURVEY REPORT
BENCH MARK COVER SHEET - DATUM NGVD 1929

ROAD SECTION NO. Corvette Avenue

N/A	N/A	N/A	Highlands
Financial Project ID:	**State Job No. (Old):**	**S.R. No.**	**County:**

PROJECT DESCRIPTION (FROM SYSTEM): From Thunderbird Road to New Life Way (Off - System)

SECTION(S) - 22 **TOWNSHIP -** 34 **S** **RANGE -** 28 **E**

LINE NO.	BEGINNING MARK DESCRIPTION	ENDING MARK DESCRIPTION	LINE LENGTH	ALLOWABLE ERROR	ACTUAL ERROR	ADJUSTMENT PER FOOT
	BM 27	BM 31	10,093	0.069	0.032	0.000003171

ELEVATIONS ADJUSTED BY PROPORTIONATE RELATIONSHIP OF ERROR TO LENGTH OF RUN

NOTES: Bench Line Originates on BM 27 off U.S. 27 and Proceeds through BM 1, BM 2, BM 3 and BM 4 and ends on BM 31 off U.S. 27.

LOCATION MAP

SEE ATTACHED

SEAL

Greenhorne & O'Mara Inc. LB 3935
FIRM NAME & L.B. No.

13535 Feather Sound Dr. Ste. 400
Clearwater Fl. 33762
STREET ADDRESS, CITY, STATE, ZIP

Peter J. Mattson PSM 6290
SURVEYORS NAME & LICENSE No.

11-19-07
SURVEYORS SIGNATURE **DATE**

FIELD SURVEY DATE: 09-04-07

NOT VALID UNLESS SIGNED AND EMBOSSED WITH SURVEYORS=S SEAL

Revised 10/05/04

GREENHORNE & O'MARA
CONSULTING ENGINEERS

CORVETTE AVENUE

BENCH RUN

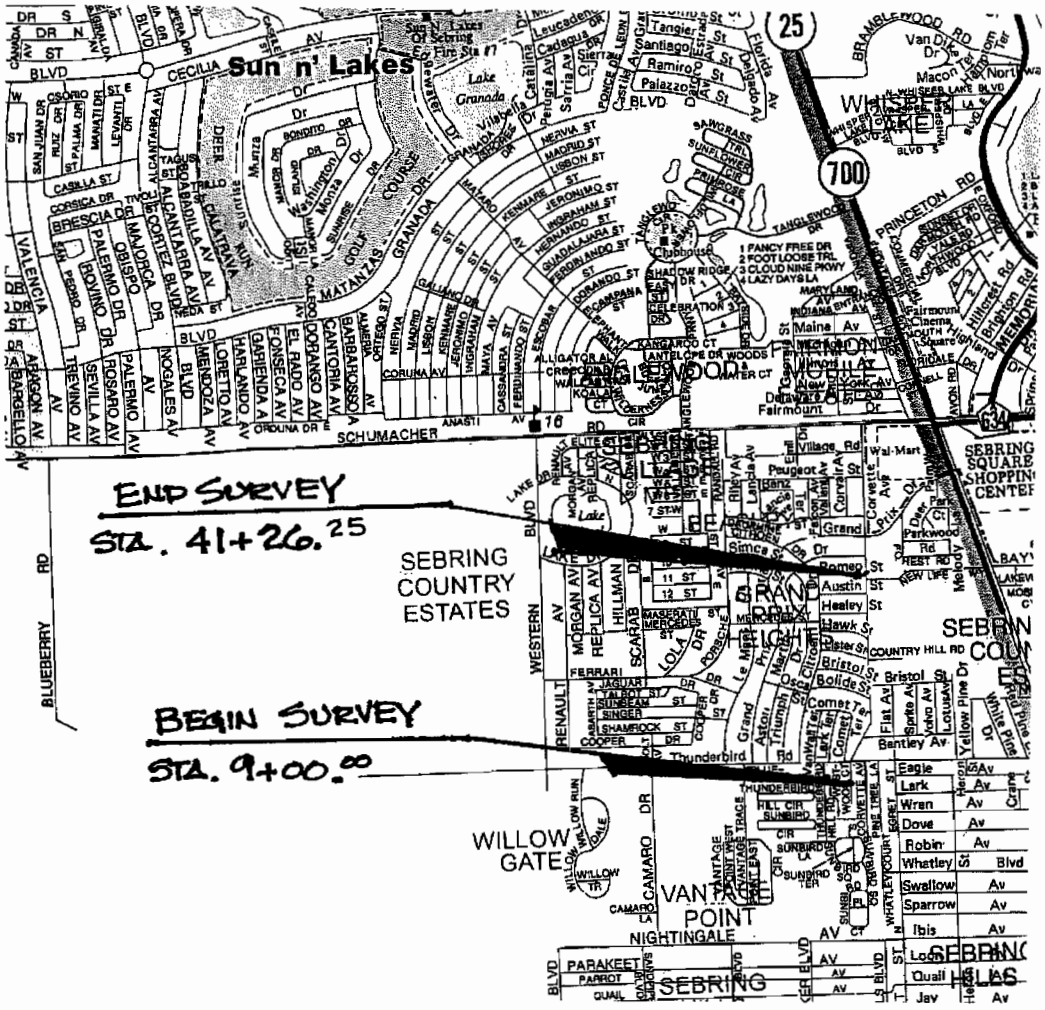

HIGHLANDS COUNTY FLORIDA

SECTION 22 – TOWNSHIP 34 SOUTH – RANGE 28 EAST

VICINITY MAP (NOT TO SCALE)

Feather Sound Corporate Center Bldg 1 ▪ 13535 Feather Sound Drive Suite 400 ▪ Clearwater, FL 33762
Phone 727 576 0402 ▪ Fax 727 576 0305
www.G-and-O.com

Florida Department of Transportation District One

Vertical Control Data Sheet

DATUM

NGVD 1929 X

NAVD 1988 ___

Monument Name or Designation: BM 27 Elevation feet: 142.547

State Road No.: CORVETTE AVENUE County: HIGHLANDS

Section: 23 Township: 34 S Range: 28 E Roadway Section I.D.: N/A

Establishing Firm: GREENHORNE & O'MARA INC. Field Book No.: 501514

Established: / / Recovered: 09 / 04 / 07 Financial Project ID: N/A

State Plane Coordinates:
(Nearest Foot) N (Y): = N/A E (X): = N/A

Base Line Station and Offset: STA. 3213+62.0 - 130.0' LEFT (US 27)

Description of Monument: STANDARD 4" X 4" FDOT CONCRETE MONUMENT WITH BRASS DISK STAMPED BM 27

Distance and Direction from Nearest Intersection: 512± FEET SOUTH OF THE INTERSECTION OF NORTHSIDE DRIVE AND U.S. 27.

Field Location Sketch

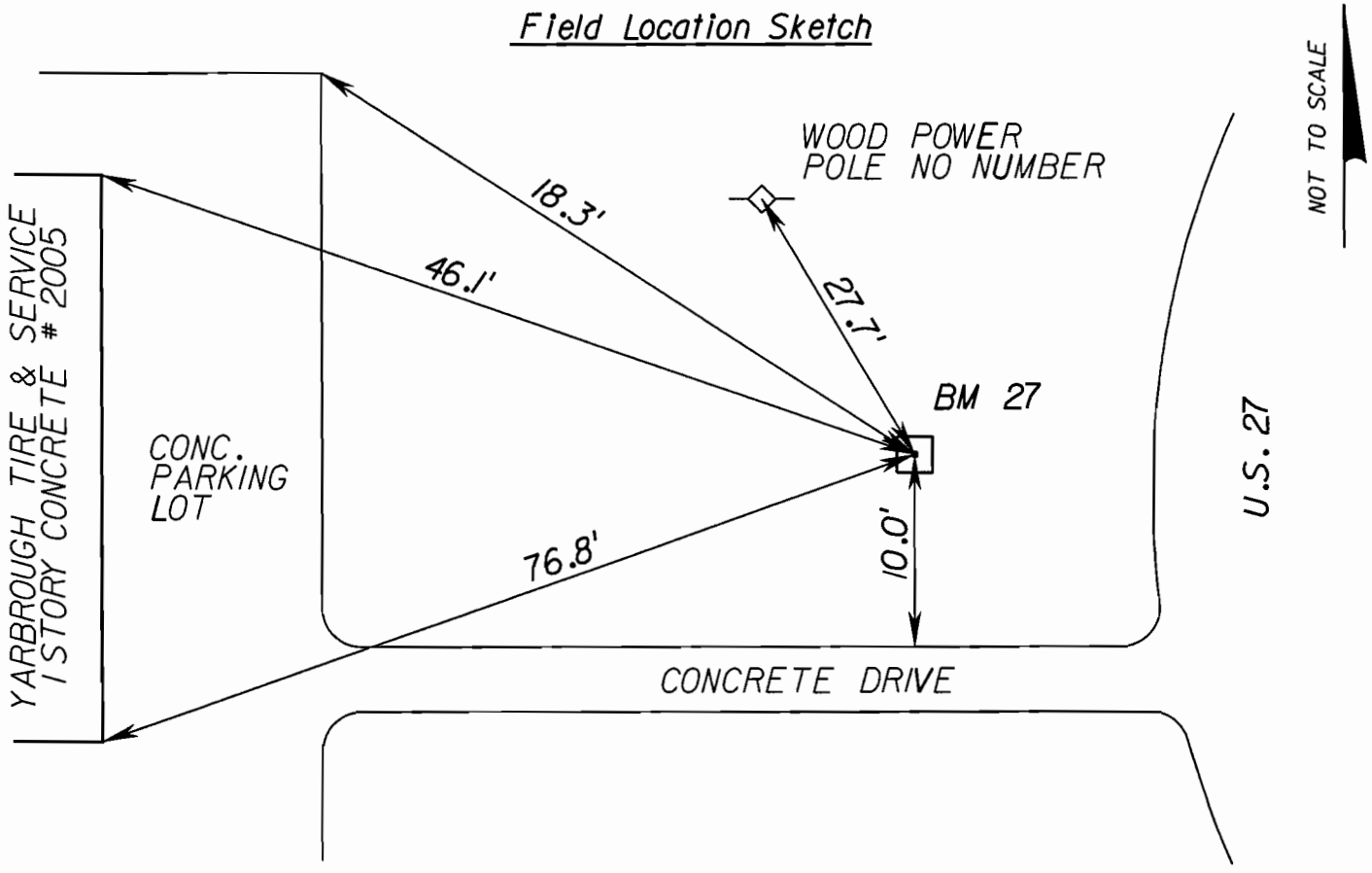

Florida Department of Transportation District One

Vertical Control Data Sheet

DATUM

NGVD 1929 X

NAVD 1988 ___

Monument Name or Designation: BM 1 Elevation feet: 160.568

State Road No.: CORVETTE AVENUE County: HIGHLANDS

Section: 27 Township: 34 S Range: 28 E Roadway Section I.D.: N/A

Establishing Firm: GREENHORNE & O'MARA INC. Field Book No.: 501514

Established: 09 / 04 / 07 Recovered: / / Financial Project ID: N/A

State Plane Coordinates:
(Nearest Foot) N (Y): = 1151250 E (X): = 494109

Base Line Station and Offset: 9+74.0 - 23.9' LEFT

Description of Monument: STANDARD 4" X 4" FDOT CONCRETE MONUMENT WITH BRASS DISK STAMPED BM 1

Distance and Direction from Nearest Intersection: THE SOUTHWEST CORNER OF THUNDERBIRD ROAD AND CORVETTE AVENUE.

Field Location Sketch

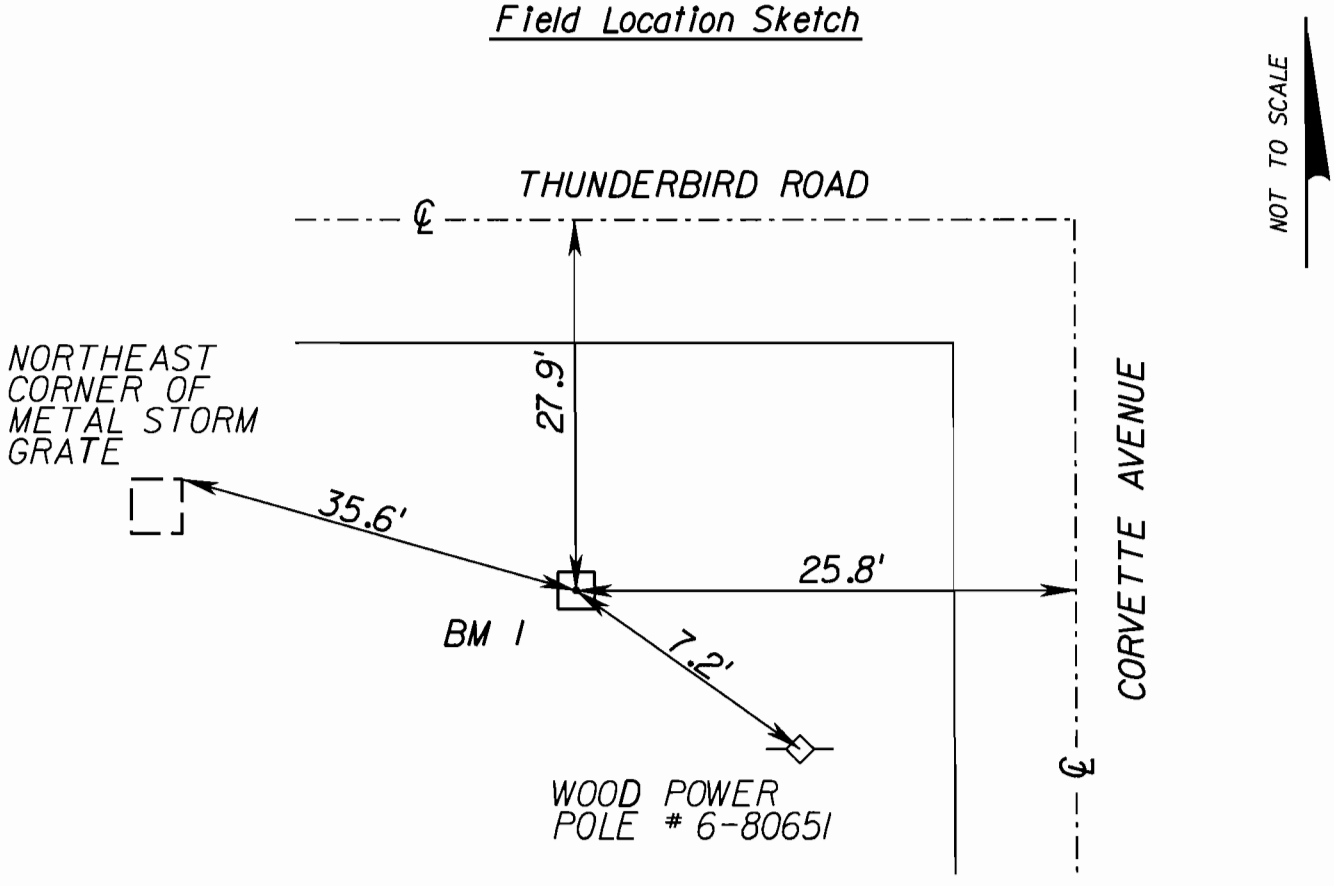

Florida Department of Transportation District One

Vertical Control Data Sheet

DATUM

NGVD 1929 X

NAVD 1988 ___

Monument Name or Designation: BM 2 Elevation feet: 160.070

State Road No.: CORVETTE AVENUE County: HIGHLANDS

Section: 22 Township: 34 S Range: 28 E Roadway Section I.D.: N/A

Establishing Firm: GREENHORNE & O'MARA INC. Field Book No.: 501514

Established: 09 / 04 / 07 Recovered: / / Financial Project ID: N/A

State Plane Coordinates:
(Nearest Foot) N (Y): = 1152131 E (X): = 494511

Base Line Station and Offset: 19+34.3 - 27.6' RIGHT

Description of Monument: STANDARD 4" X 4" FDOT CONCRETE MONUMENT WITH BRASS DISK STAMPED BM 2

Distance and Direction from Nearest Intersection: EAST OF THE INTERSECTION OF CORVETTE AVENUE AND BULIDE STREET.

Field Location Sketch

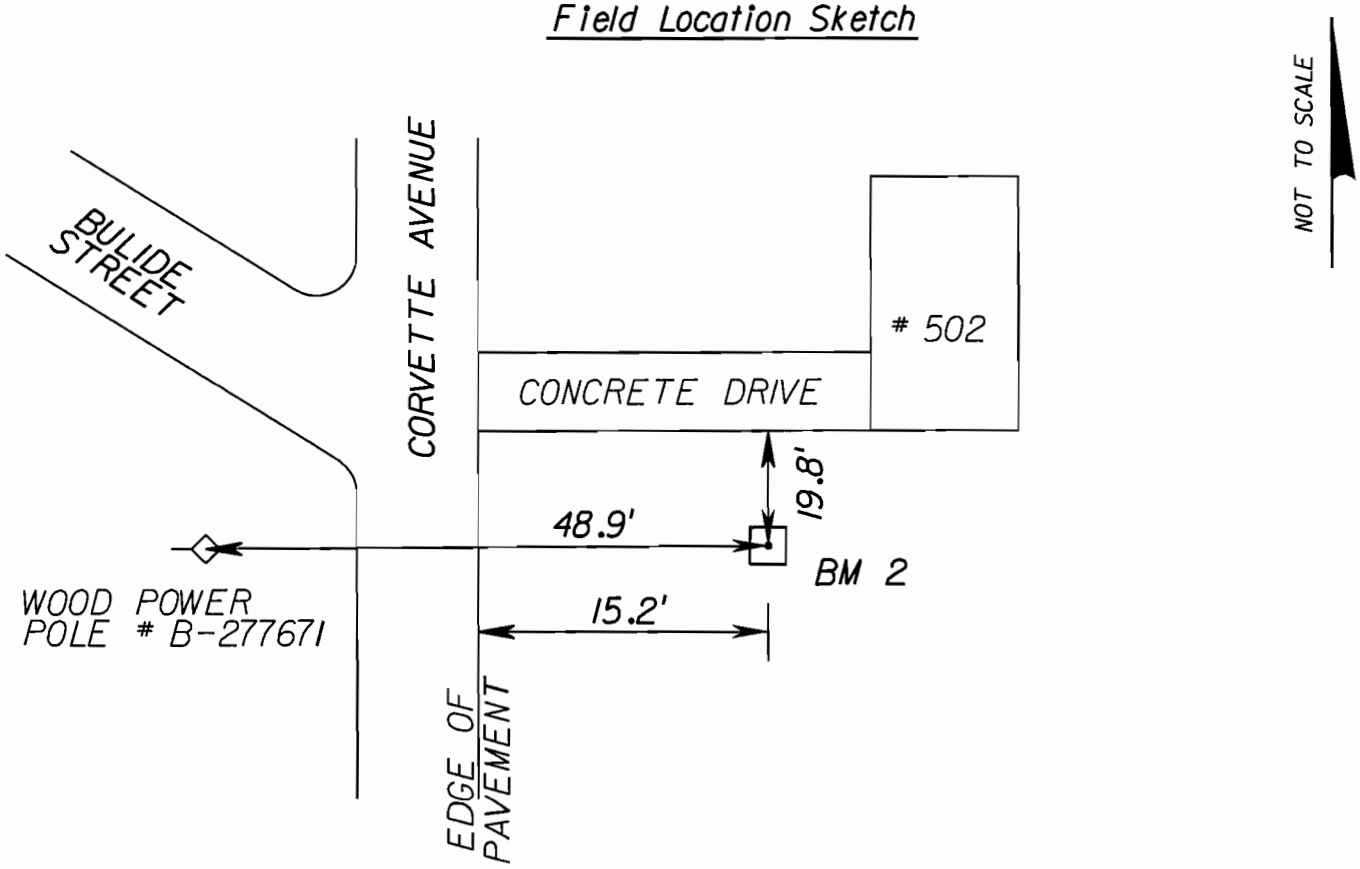

Florida Department of Transportation District One

Vertical Control Data Sheet

DATUM

NGVD 1929 X

NAVD 1988 ___

Monument Name or Designation: BM 3 Elevation feet: 160.443

State Road No.: CORVETTE AVENUE County: HIGHLANDS

Section: 22 Township: 34 S Range: 28 E Roadway Section I.D.: N/A

Establishing Firm: GREENHORNE & O'MARA INC. Field Book No.: 501514

Established: 09 / 04 / 07 Recovered: / / Financial Project ID: N/A

State Plane Coordinates:
(Nearest Foot) N (Y): = 1153061 E (X): = 494468

Base Line Station and Offset: 28+63.9 - 21.7' LEFT

Description of Monument: STANDARD 4" X 4" FDOT CONCRETE MONUMENT WITH BRASS DISK STAMPED BM 3

Distance and Direction from Nearest Intersection: THE SOUTHWEST CORNER OF CORVETTE AVENUE AND HAWK STREET.

Field Location Sketch

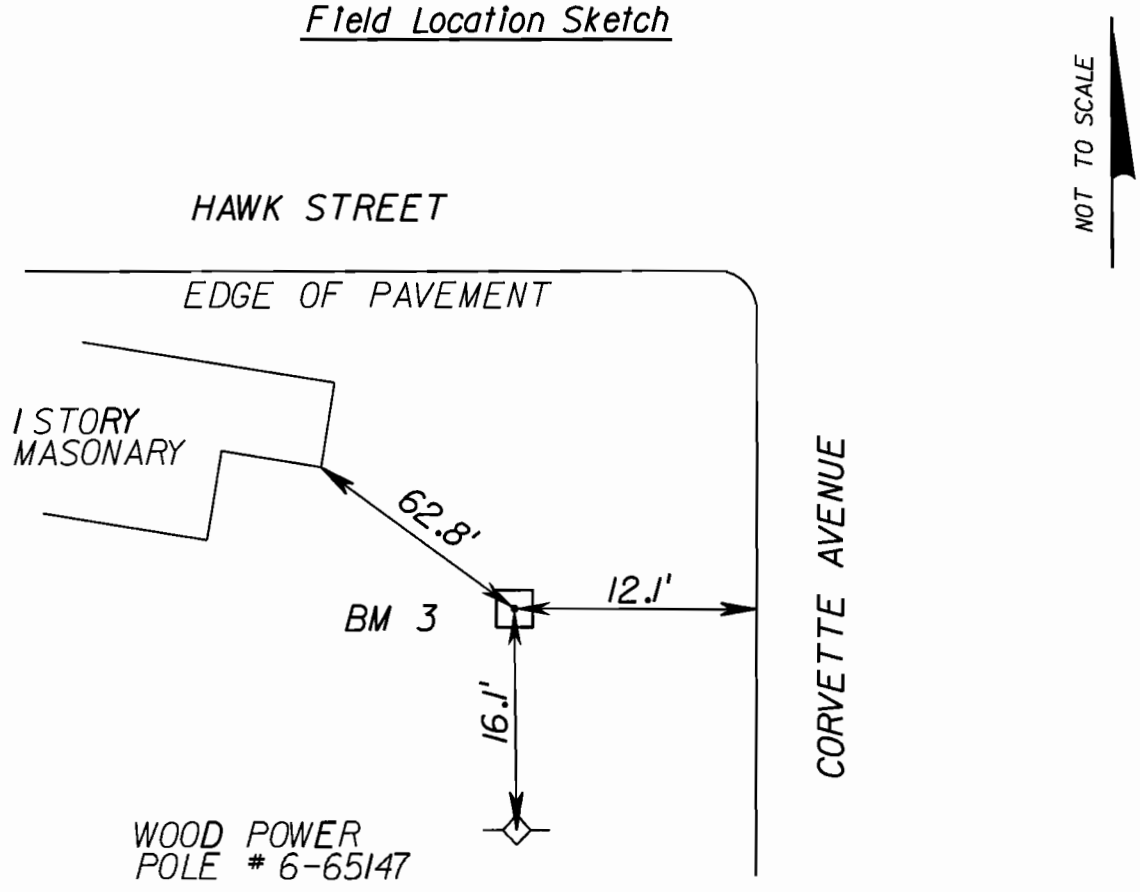

Florida Department of Transportation District One

Vertical Control Data Sheet

DATUM

NGVD 1929 X

NAVD 1988 ___

Monument Name or Designation: BM 4 Elevation feet: 161.835

State Road No.: CORVETTE AVENUE County: HIGHLANDS

Section: 22 Township: 34 S Range: 28 E Roadway Section I.D.: N/A

Establishing Firm: GREENHORNE & O'MARA INC. Field Book No.: 501514

Established: 09 / 04 / 07 Recovered: / / Financial Project ID: N/A

State Plane Coordinates:
(Nearest Foot) N (Y): = 1154100 E (X): = 494469

Base Line Station and Offset: 39+03.3 - 27.9' LEFT

Description of Monument: STANDARD 4" X 4" FDOT CONCRETE MONUMENT WITH BRASS DISK STAMPED BM 4

Distance and Direction from Nearest Intersection: WEST OF THE INTERSECTION OF CORVETTE AVENUE AND NEW LIFE WAY.

Field Location Sketch

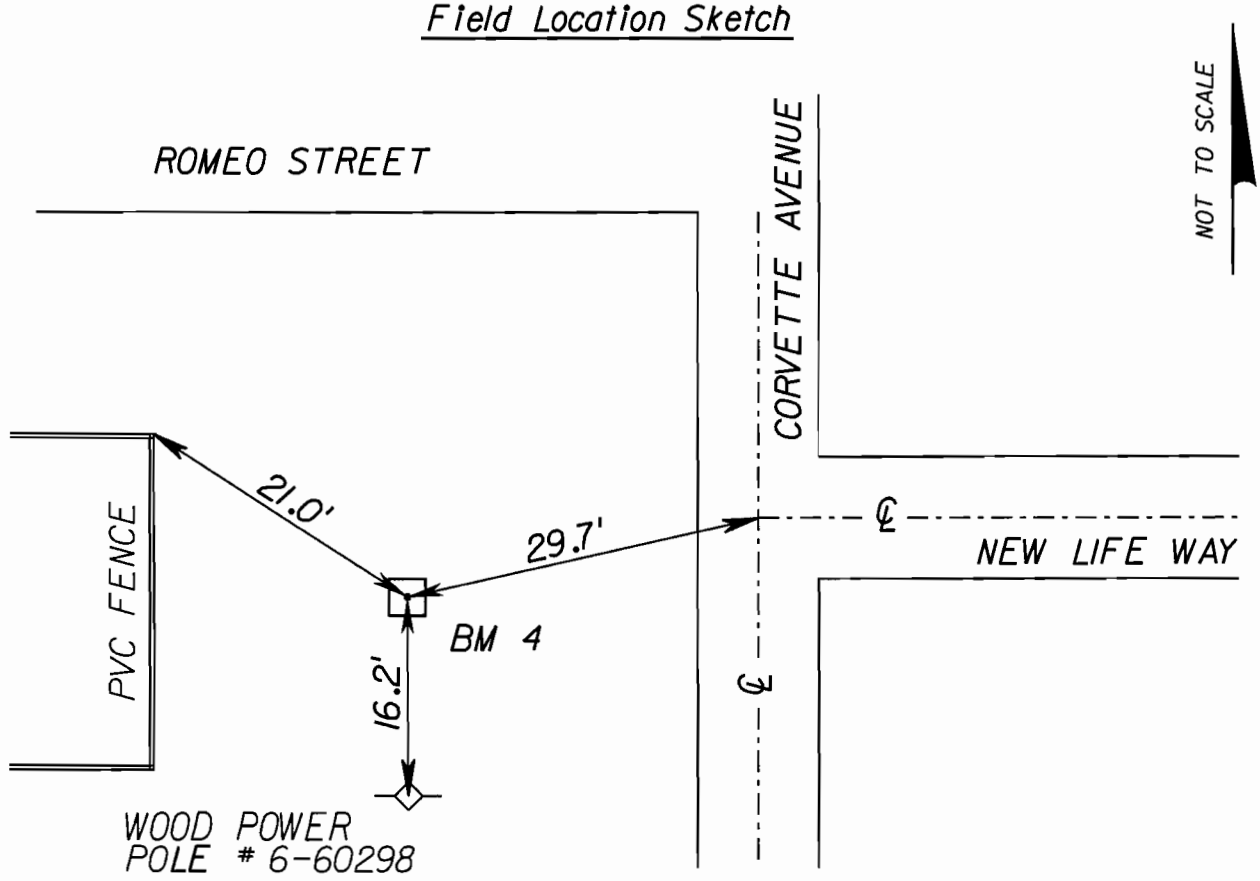

Florida Department of Transportation District One

Vertical Control Data Sheet

DATUM

NGVD 1929 X

NAVD 1988 ___

Monument Name or Designation: BM 31 Elevation feet: 145.130

State Road No.: CORVETTE AVENUE County: HIGHLANDS

Section: 23 Township: 34 S Range: 28 E Roadway Section I.D.: N/A

Establishing Firm: GREENHORNE & O'MARA INC. Field Book No.: 501514

Established: / / Recovered: 09 / 04 / 07 Financial Project ID: N/A

State Plane Coordinates:
(Nearest Foot) N (Y): = N/A E (X): = N/A

Base Line Station and Offset: STA. 3253+81.1 - 67.3' RIGHT (US 27)

Description of Monument: STANDARD 4" X 4" FDOT CONCRETE MONUMENT WITH BRASS DISK STAMPED BM 31

Distance and Direction from Nearest Intersection: 270± FEET SOUTH OF THE INTERSECTION OF GRAND PRIX ROAD AND U.S. 27.
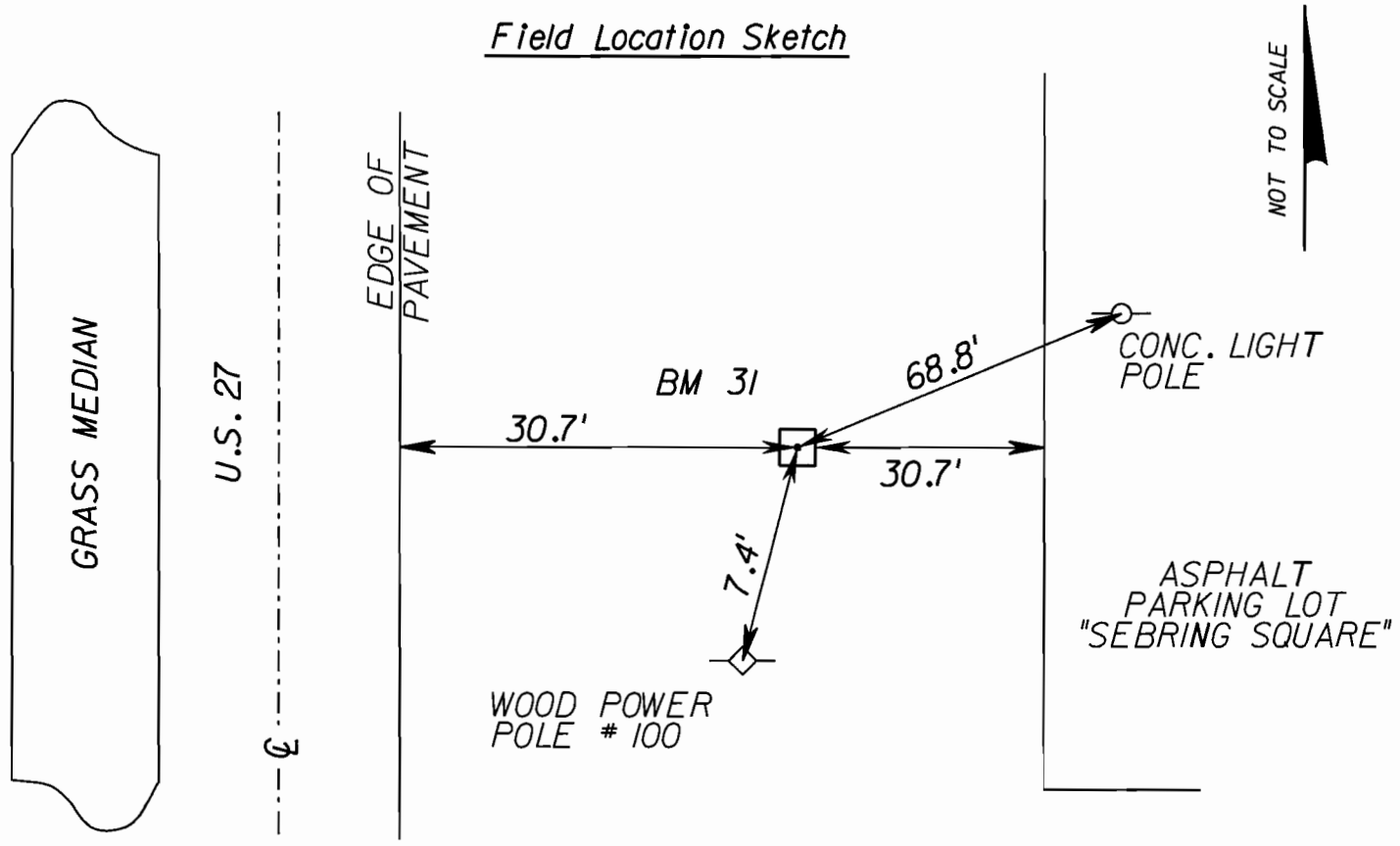
Field Location Sketch