ELEVATIONS VERIFIED WITH FIELD BOOK No. 502130 / FDOT D-1 / WCG 06 - 02 - 2011

FLORIDA DEPARTMENT OF TRANSPORTATION
DISTRICT ONE VERTICAL CONTROL SURVEY REPORT
BENCH MARK COVER SHEET - DATUM NGVD 1929

ROAD SECTION NO. 07010-000

408286-5-32-01	N/A	80	Hendry and Glades
Financial Project ID:	**State Job No. (Old):**	**S.R. No.**	**County:**

PROJECT DESCRIPTION (FROM SYSTEM): From: Dalton Lane To: Indian Hills Drive MP 17.5 MP 22.9 5.4

SECTION(S) - 1 and 2 **TOWNSHIP -** 43 S **RANGE -** 30 E
SECTION(S) - 36 **TOWNSHIP -** 42 S **RANGE -** 30 E
SECTION(S) - 3, 4, 5 and 6 **TOWNSHIP -** 43 S **RANGE -** 31 E
SECTION(S) - 31, 32, 33 and 35 **TOWNSHIP -** 42 S **RANGE -** 31 E

LINE NO.	BEGINNING MARK DESCRIPTION	ENDING MARK DESCRIPTION	LINE LENGTH	ALLOWABLE ERROR	ACTUAL ERROR	ADJUSTMENT PER FOOT
1	HEN 49	BM 337	1078	0.0226	0.006	0.0000055659
2	HEN 49	W 72 RESET	8614	0.0639	-0.050	-0.0000058045
3	W 72 RESET	R 414	5975	0.0532	0.010	0.0000016736
4	R 414	B 413	6038	0.0535	-0.028	-0.0000046373
5	B 413	HEN 47	5609	0.0515	-0.011	-0.0000019611
6	HEN 47	P 414	14273	0.0822	-0.067	-0.0000046942

ELEVATIONS ADJUSTED BY PROPORTIONATE RELATIONSHIP OF ERROR TO LENGTH OF RUN

NOTES:

LINE 1: ORIGINATES AT RECOVERED S.F.W.M.D. BENCH MARK "HEN 49" (NGS PID AD8262) AND RUNS WESTERLY FOR VERIFICATION TO RECOVERED F.D.O.T. BENCH MARK "BM 337" (F.P.I.D. 408286-3).

LINE 2: ORIGINATES AT RECOVERED S.F.W.M.D. BENCH MARK "HEN 49" (NGS PID AD8262) AND RUNS EASTERLY THROUGH FOUND F.D.O.T. BENCH MARKS BM 338, BM 339 RESET, BM 340 RESET AND BM 341 (F.P.I.D. 408286-3); BM 342, BM 343, BM 344 AND BM 345 (F.P.I.D. 408286-2) ADJUSTING INTO RECOVERED N.G.S. BENCH MARK "W 72 RESET" (NGS PID AD5623).

LINE 3: ORIGINATES AT RECOVERED N.G.S. BENCH MARK "W 72 RESET" (NGS PID AD5623) AND RUNS EASTERLY THROUGH FOUND F.D.O.T. BENCH MARKS BM 346, BM 347, BM 348, BM 349 AND BM 350 (F.P.I.D. 408286-2) ADJUSTING INTO RECOVERED N.G.S. BENCH MARK "R 414" (NGS PID AD8261).

LINE 4: ORIGINATES AT RECOVERED N.G.S. BENCH MARK "R 414" (NGS PID AD8261) AND RUNS EASTERLY THROUGH FOUND F.D.O.T. BENCH MARKS BM 351, BM 352, BM 353, BM 354 AND BM 355 (F.P.I.D. 408286-2) ADJUSTING INTO RECOVERED N.G.S. BENCH MARK "B 413" (NGS PID AD8260).

LINE 5: ORIGINATES AT RECOVERED N.G.S. BENCH MARK "B 413" (NGS PID AD8260) AND RUNS EASTERLY THROUGH FOUND F.D.O.T. BENCH MARKS BM 1, BM 356, BM 357, BM 358, BM 359 AND BM 360 (F.P.I.D. 408286-2) ADJUSTING INTO RECOVERED S.F.W.M.D. BENCH MARK "HEN 47" (NGS PID AD8259).

LINE 6: ORIGINATES AT RECOVERED S.F.W.M.D. BENCH MARK "HEN 47" (NGS PID AD8259) AND RUNS EASTERLY THROUGH FOUND F.D.O.T. BENCH MARKS BM 362, BM 363 (F.P.I.D. 408286-2) AND SET BENCH MARKS BM 361 RESET, BM 364 RESET AND BM 365 RESET ADJUSTING INTO RECOVERED N.G.S. BENCH MARK "P 414" (NGS PID AD8257).

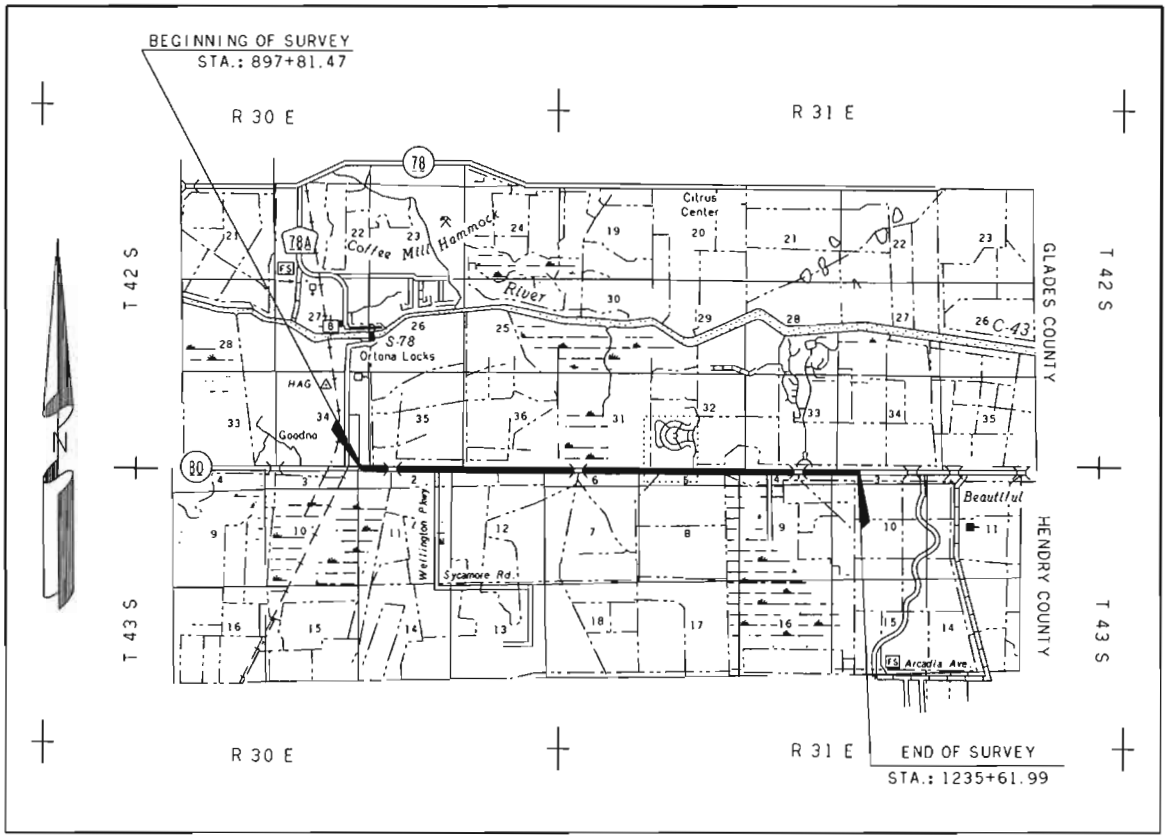

GLADES AND HENDRY COUNTY, FLORIDA

LOCATION MAP

NOT TO SCALE

ATTACHMENTS:

Reference to Attachment "A"
Refer to attachment "A" which consists of the published Vertical Control for the above mentioned project that was recovered and utilized for the vertical control throughout the project limits. (Data File: Recovered BenchMarks.pdf)

Reference to Attachment "B"
Refer to attachment "B" which consists of the Vertical Control Data Sheets relative to the North American Vertical Datum of 1988 (N.A.V.D. 88) for the above mentioned project. (Data File: 408286-5 BenchMarks.pdf)

Reference to Attachment "C"
Refer to attachment "C" Items 1-6 which consists of the Electronic 24"x36" Plan Sheets for the Vertical Control Data Sheets for the above mentioned project.
(Data Files: CURCRD01.dgn, CURCRD02.dgn, CURCRD03.dgn, CURCRD04.dgn, CURCRD05.dgn and CURCRD06.dgn)

SEAL

HYATT SURVEY SERVICES, INC. L.B. No. 7203
FIRM NAME and L.B. No.

11007 8th Ave. East Bradenton, Florida 34212
STREET ADDRESS, CITY, STATE, ZIP

Russell P. Hyatt P.S.M. No. 5303
SURVEYORS NAME and LICENSE No.

SURVEYORS SIGNATURE **DATE** 5/3/11

FIELD SURVEY DATE: FEBURARY 2011

NOT VALID UNLESS SIGNED AND EMBOSSED WITH SURVEYORS SEAL

Florida Department of Transportation District One

Vertical Control Data Sheet

DATUM

NGVD 1929 X

NAVD 1988 ___

Monument Name or Designation: BM 337 Elevation feet: 16.990

State Road No.: S.R. 80 County: HENDRY

Section: 2 Township: 43 S Range: 30 E Roadway Section I.D.: 07010-000

Establishing Firm: AIM ENGINEERING Field Book No.: 502130

Established: / / Recovered: 02 / 09 / 11 Financial Project ID: 408286-5

State Plane Coordinates:
(Nearest Foot) N (Y): = 884989 E (X): = 555949

Base Line Station and Offset: STA. 927+86 149' RT

Description of Monument: FOUND STANDARD 4"X4" F.D.O.T CONCRETE MONUMENT WITH A BRASS DISK STAMPED BM 337

Distance and Direction from Nearest Intersection: 2.8 MILES WEST ALONG S.R. 80 FROM THE INTERSECTION OF LEXINGTON PARKWAY AND STATE ROAD 80

Field Location Sketch

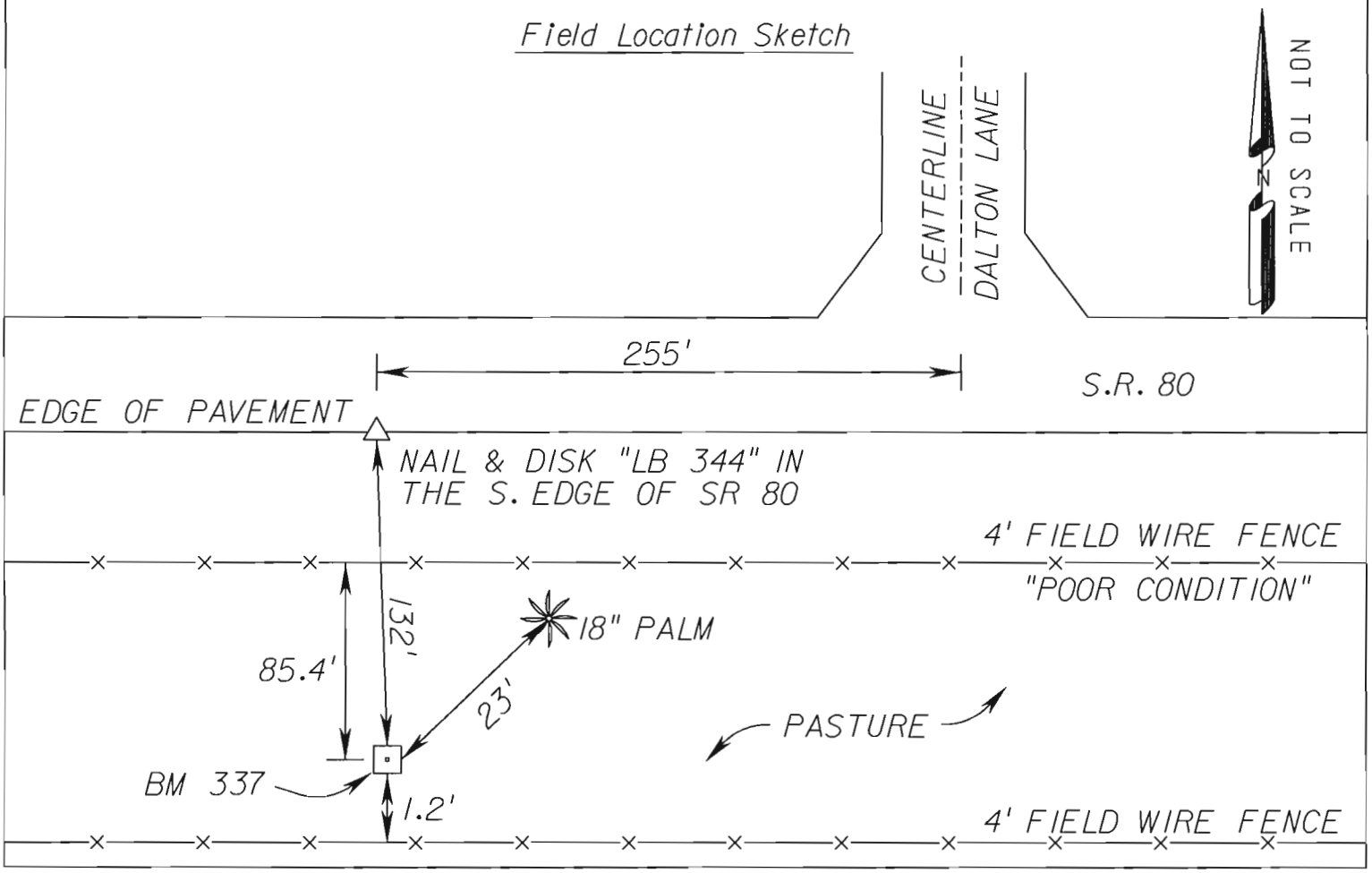

Florida Department of Transportation District One

Vertical Control Data Sheet

DATUM

NGVD 1929 X

NAVD 1988 ___

Monument Name or Designation: HEN 49 Elevation feet: 20.030

State Road No.: S.R. 80 County: HENDRY

Section: 2 Township: 43S Range: 30E Roadway Section I.D.: 07010-000

Establishing Firm: S.F.W.M.D. Field Book No.: 502130

Established: / / Recovered: 02 / 09 / 11 Financial Project ID: 408286-5

State Plane Coordinates:
(Nearest Foot) N (Y): = 885112 E (X): = 556932

Base Line Station and Offset: STA. 937+68 23' RT

Description of Monument: SOUTH FLORIDA WATER MANAGEMENT DISTRICT SURVEY DISC FOUND IN TOP OF A CONCRETE HEADWALL STAMPED HEN 49

Distance and Direction from Nearest Intersection: 2.6 MILES WEST ALONG S.R. 80 FROM THE INTERSECTION OF LEXINGTON PARKWAY AND STATE ROAD 80

Field Location Sketch

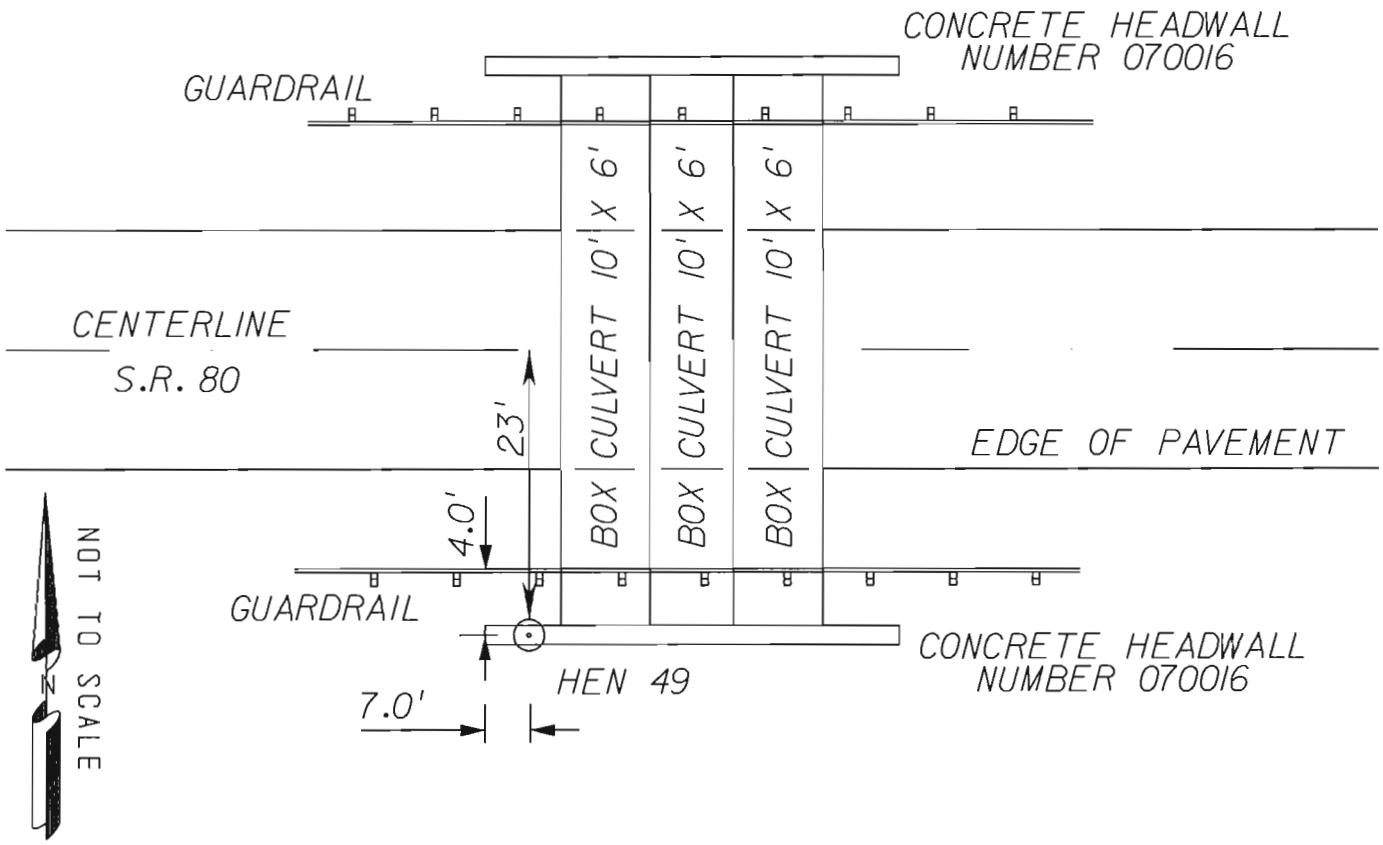

The NGS Data Sheet

See file dsdata.txt for more information about the datasheet.

```
DATABASE =  ,PROGRAM = datasheet, VERSION = 7.85
1         National Geodetic Survey,   Retrieval Date = FEBRUARY  4, 2011
 AD8262 ***********************************************************************
 AD8262  DESIGNATION -  HEN 49
 AD8262  PID         -  AD8262
 AD8262  STATE/COUNTY-  FL/GLADES
 AD8262  USGS QUAD   -  GOODNO (1973)
 AD8262
 AD8262                        *CURRENT SURVEY CONTROL
 AD8262  ___________________________________________________________________
 AD8262* NAD 83(2007)-  26 46 06.32371(N)    081 18 14.88752(W)     ADJUSTED
 AD8262* NAVD 88     -         5.711  (meters)      18.74   (feet)  ADJUSTED
 AD8262  ___________________________________________________________________
 AD8262  EPOCH DATE  -        2002.00
 AD8262  X           -     861,549.032 (meters)                     COMP
 AD8262  Y           -  -5,632,967.264 (meters)                     COMP
 AD8262  Z           -   2,855,321.237 (meters)                     COMP
 AD8262  LAPLACE CORR-          -0.12  (seconds)                    DEFLEC09
 AD8262  ELLIP HEIGHT-         -18.733 (meters)          (02/10/07) ADJUSTED
 AD8262  GEOID HEIGHT-         -24.43  (meters)                     GEOID09
 AD8262  DYNAMIC HT  -           5.702 (meters)      18.71   (feet) COMP
 AD8262
 AD8262  ------- Accuracy Estimates (at 95% Confidence Level in cm) --------
 AD8262  Type    PID    Designation                      North   East  Ellip
 AD8262  ---------------------------------------------------------------------
 AD8262  NETWORK AD8262 HEN 49                            1.69   1.67   2.92
 AD8262  ---------------------------------------------------------------------
 AD8262  MODELED GRAV-     979,103.8   (mgal)                       NAVD 88
 AD8262
 AD8262  VERT ORDER  -  FIRST     CLASS II
 AD8262
 AD8262.The horizontal coordinates were established by GPS observations
 AD8262.and adjusted by the National Geodetic Survey in February 2007.
 AD8262
 AD8262.The datum tag of NAD 83(2007) is equivalent to NAD 83(NSRS2007).
 AD8262.See National Readjustment for more information.
 AD8262.The horizontal coordinates are valid at the epoch date displayed above.
 AD8262.The epoch date for horizontal control is a decimal equivalence
 AD8262.of Year/Month/Day.
 AD8262
 AD8262.The orthometric height was determined by differential leveling and
 AD8262.adjusted in September 1992.
 AD8262
 AD8262.The X, Y, and Z were computed from the position and the ellipsoidal ht.
 AD8262
 AD8262.The Laplace correction was computed from DEFLEC09 derived deflections.
 AD8262
 AD8262.The ellipsoidal height was determined by GPS observations
 AD8262.and is referenced to NAD 83.
 AD8262
 AD8262.The geoid height was determined by GEOID09.
 AD8262
```

```
AD8262.The dynamic height is computed by dividing the NAVD 88
AD8262.geopotential number by the normal gravity value computed on the
AD8262.Geodetic Reference System of 1980 (GRS 80) ellipsoid at 45
AD8262.degrees latitude (g = 980.6199 gals.).
AD8262
AD8262.The modeled gravity was interpolated from observed gravity values.
AD8262
AD8262;                    North         East     Units Scale Factor Converg.
AD8262;SPC FL E     -   269,782.619   169,753.177   MT  0.99995247   -0 08 13.1
AD8262;SPC FL E     -   885,111.81    556,931.88   sFT  0.99995247   -0 08 13.1
AD8262;UTM  17      - 2,960,822.552   469,763.497   MT  0.99961129   -0 08 13.1
AD8262
AD8262!             -  Elev Factor  x  Scale Factor =   Combined Factor
AD8262!SPC FL E     -   1.00000294  x   0.99995247  =   0.99995541
AD8262!UTM  17      -   1.00000294  x   0.99961129  =   0.99961423
AD8262
AD8262                          SUPERSEDED SURVEY CONTROL
AD8262
AD8262  NAD 83(1999)-  26 46 06.32398(N)    081 18 14.88791(W) AD(       ) 1
AD8262  ELLIP H (12/12/02)  -18.748  (m)                       GP(       ) 4 1
AD8262  NAVD 88 (12/12/02)    5.71   (m)           18.7    (f) LEVELING    3
AD8262  NGVD 29 (09/01/92)    6.104  (m)           20.03   (f) ADJUSTED    1 2
AD8262
AD8262.Superseded values are not recommended for survey control.
AD8262.NGS no longer adjusts projects to the NAD 27 or NGVD 29 datums.
AD8262.See file dsdata.txt to determine how the superseded data were derived.
AD8262
AD8262_U.S. NATIONAL GRID SPATIAL ADDRESS: 17RMK6976360822(NAD 83)
AD8262_MARKER: DD = SURVEY DISK
AD8262_SETTING: 38 = SET IN THE ABUTMENT OR PIER OF A LARGE BRIDGE
AD8262_SP_SET: HEADWALL
AD8262_STAMPING: HEN 49 SFWMD
AD8262_MARK LOGO: FLDT
AD8262_MAGNETIC: N = NO MAGNETIC MATERIAL
AD8262_STABILITY: B = PROBABLY HOLD POSITION/ELEVATION WELL
AD8262_SATELLITE: THE SITE LOCATION WAS REPORTED AS SUITABLE FOR
AD8262+SATELLITE: SATELLITE OBSERVATIONS - November 19, 2007
AD8262
AD8262  HISTORY     - Date     Condition        Report By
AD8262  HISTORY     - UNK      MONUMENTED       FLDT
AD8262  HISTORY     - 19920401 GOOD             NGS
AD8262  HISTORY     - 20020519 GOOD             MAPTEC
AD8262  HISTORY     - 20040929 GOOD             MCKIM
AD8262  HISTORY     - 20071119 GOOD             INDIV
AD8262
AD8262                          STATION DESCRIPTION
AD8262
AD8262'DESCRIBED BY NATIONAL GEODETIC SURVEY 1992
AD8262'13.4 KM (8.30 MI) EASTERLY ALONG STATE HIGHWAY 80 FROM THE COUNTY
AD8262'COURTHOUSE IN LA BELLE, IN TOP OF AND 2.1 M (6.9 FT) EAST OF THE WEST
AD8262'END OF THE SOUTH CONCRETE HEADWALL OF A BOX CULVERT AT A CANAL, 7.0 M
AD8262'(23.0 FT) SOUTH OF THE CENTERLINE OF THE HIGHWAY, AND 0.3 M (1.0 FT)
AD8262'BELOW THE LEVEL OF THE HIGHWAY.
AD8262
AD8262                          STATION RECOVERY (2002)
AD8262
AD8262'RECOVERY NOTE BY MAPTECH INCORPORATED 2002 (CDP)
AD8262'STATION RECOVERY (2002)
AD8262'RECOVERY NOTE BY MAPTECH, INCORPORATED 2002 (CDP)
AD8262'RECOVERED AS DESCRIBED.
AD8262'
AD8262'
AD8262
```

```
AD8262                          STATION RECOVERY (2004)
AD8262
AD8262'RECOVERY NOTE BY MCKIM AND CREED 2004 (BRH)
AD8262'RECOVERED IN GOOD CONDITION.
AD8262
AD8262                          STATION RECOVERY (2007)
AD8262
AD8262'RECOVERY NOTE BY INDIVIDUAL CONTRIBUTORS 2007 (DR)
AD8262'RECOVED AS DESCRIBED

*** retrieval complete.
Elapsed Time = 00:00:00
```

Florida Department of Transportation District One

Vertical Control Data Sheet

DATUM

NGVD 1929 X

NAVD 1988 ___

Monument Name or Designation: BM 338 Elevation feet: 19.740

State Road No.: S.R. 80 County: HENDRY

Section: 2 Township: 43 S Range: 30 E Roadway Section I.D.: 07010-000

Establishing Firm: AIM ENGINEERING Field Book No.: 502130

Established: / / Recovered: 02 / 09 / 11 Financial Project ID: 408286-5

State Plane Coordinates:
(Nearest Foot) N (Y): = 884984 E (X): = 557013

Base Line Station and Offset: STA. 938+50 151' RT

Description of Monument: FOUND STANDARD 4"X4" F.D.O.T CONCRETE MONUMENT WITH A BRASS DISK STAMPED BM 338

Distance and Direction from Nearest Intersection: 2.6 MILES WEST ALONG S.R. 80 FROM THE INTERSECTION OF LEXINGTON PARKWAY AND STATE ROAD 80

Field Location Sketch

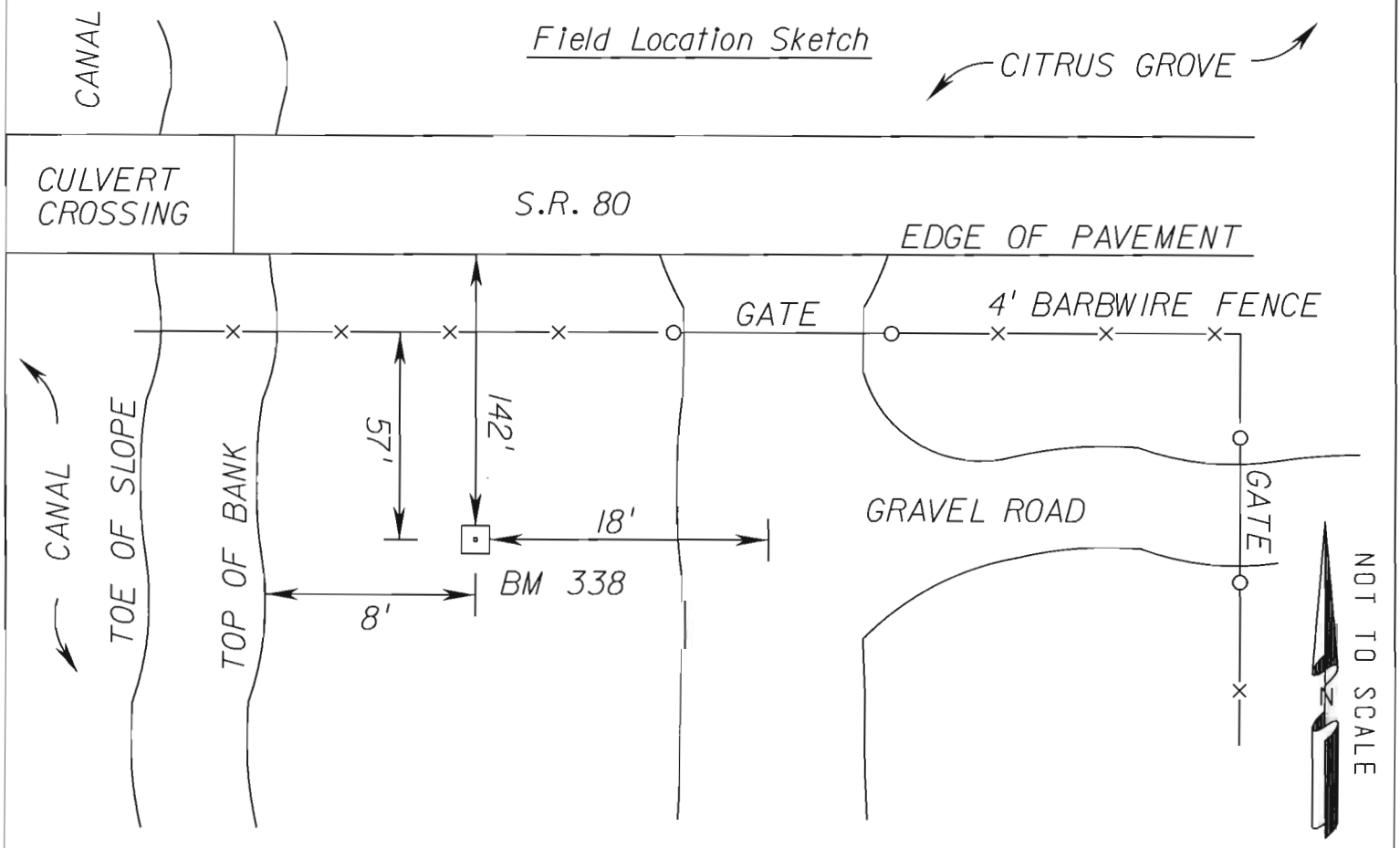

Florida Department of Transportation District One

Vertical Control Data Sheet

DATUM

NGVD 1929 X

NAVD 1988 ___

Monument Name or Designation: BM 339 RESET Elevation feet: 16.630

State Road No.: S.R. 80 County: HENDRY

Section: 2 Township: 43 S Range: 30 E Roadway Section I.D.: 07010-000

Establishing Firm: WANTMAN GROUP Field Book No.: 502130

Established: 09/ 24/ 08 Recovered: 02 / 09 / 11 Financial Project ID: 408286-5

State Plane Coordinates:
(Nearest Foot) N (Y): = 884972 E (X): = 558004

Base Line Station and Offset: STA. 948+41 159' RT

Description of Monument: FOUND POURED IN PLACE CONCRETE MONUMENT WITH F.D.O.T BRASS DISK STAMPED BM 339 RESET

Distance and Direction from Nearest Intersection: 2.4 MILES WEST ALONG S.R. 80 FROM THE INTERSECTION OF LEXINGTON PARKWAY AND STATE ROAD 80

Field Location Sketch

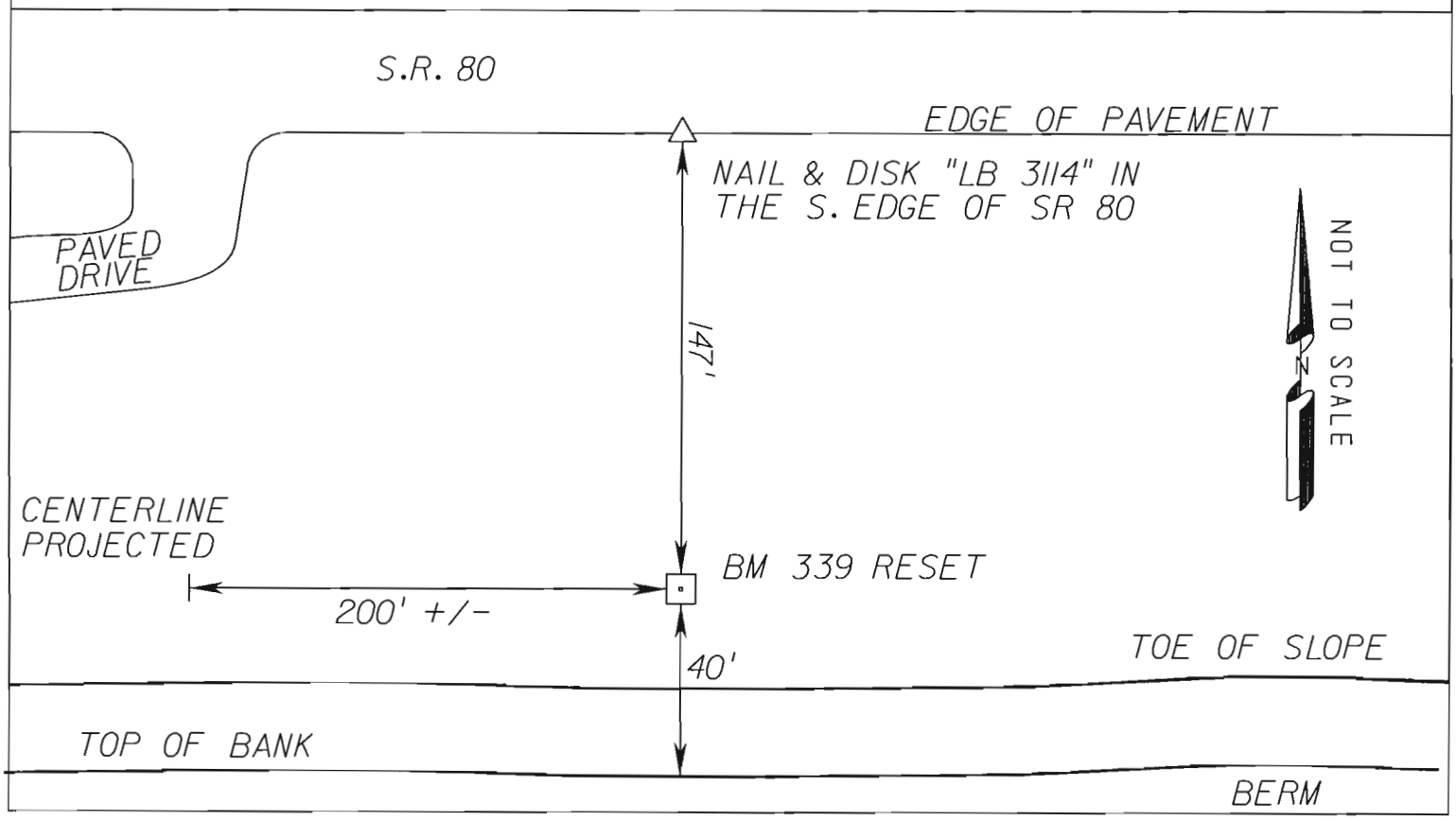

Florida Department of Transportation District One

Vertical Control Data Sheet

DATUM

NGVD 1929 X

NAVD 1988 ___

Monument Name or Designation: BM 340 RESET Elevation feet: 16.810

State Road No.: S.R. 80 County: HENDRY

Section: 2 Township: 43 S Range: 30 E Roadway Section I.D.: 07010-000

Establishing Firm: WANTMAN GROUP Field Book No.: 502130

Established: 09/ 24/ 08 Recovered: 02 / 09 / 11 Financial Project ID: 408286-5

State Plane Coordinates:
(Nearest Foot) N (Y): = 884967 E (X): = 559000

Base Line Station and Offset: STA. 958+37 161' RT

Description of Monument: FOUND POURED IN PLACE CONCRETE MONUMENT WITH F.D.O.T BRASS DISK STAMPED BM 340 RESET

Distance and Direction from Nearest Intersection: 2.2 MILES WEST ALONG S.R. 80 FROM THE INTERSECTION OF LEXINGTON PARKWAY AND STATE ROAD 80

Field Location Sketch

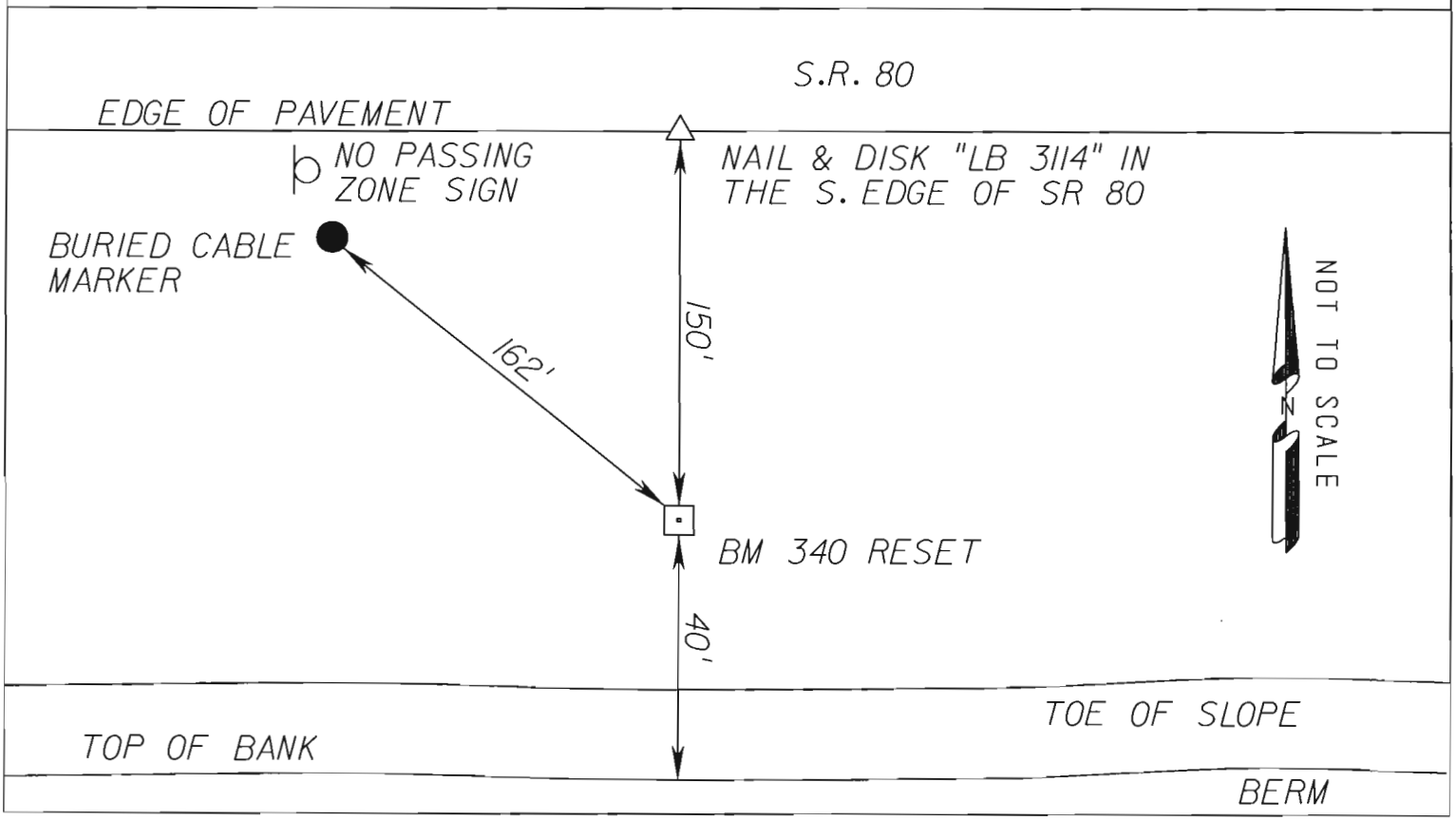

Florida Department of Transportation District One

Vertical Control Data Sheet

DATUM

NGVD 1929 X

NAVD 1988 ___

Monument Name or Designation: BM 341 Elevation feet: 19.470

State Road No.: S.R. 80 County: HENDRY

Section: 2 Township: 43 S Range: 30 E Roadway Section I.D.: 07010-000

Establishing Firm: AIM ENGINEERING Field Book No.: 502130

Established: / / Recovered: 02 / 09 / 11 Financial Project ID: 408286-5

State Plane Coordinates:
(Nearest Foot) N (Y): = 884921 E (X): = 560045

Base Line Station and Offset: STA. 968+83 203' RT

Description of Monument: FOUND STANDARD 4"X4" F.D.O.T CONCRETE MONUMENT WITH A BRASS DISK STAMPED BM 341

Distance and Direction from Nearest Intersection: 2.0 MILES WEST ALONG S.R. 80 FROM THE INTERSECTION OF LEXINGTON PARKWAY AND STATE ROAD 80

Field Location Sketch

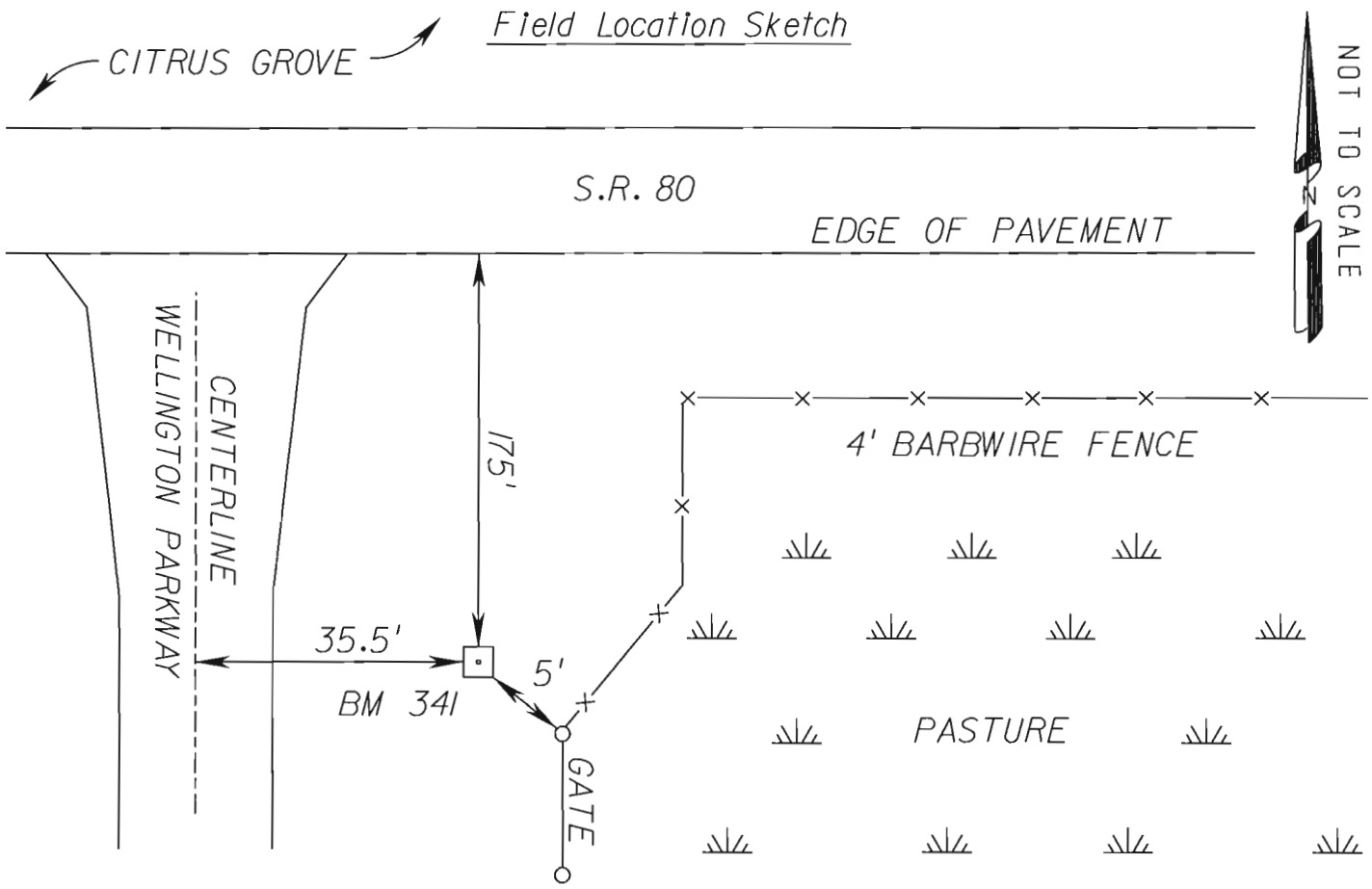

Florida Department of Transportation District One

Vertical Control Data Sheet

DATUM

NGVD 1929 X

NAVD 1988 ___

Monument Name or Designation: BM 342 Elevation feet: 17.069

State Road No.: S.R. 80 County: HENDRY

Section: 1 Township: 43S Range: 30E Roadway Section I.D.: 07010-000

Establishing Firm: AIM ENGINEERING Field Book No.: 502130

Established: / / Recovered: 02 / 09 / 11 Financial Project ID: 408286-5

State Plane Coordinates:
(Nearest Foot) N (Y): = 884949 E (X): = 561061

Base Line Station and Offset: STA. 978+98 172' RT

Description of Monument: FOUND STANDARD 4"X4" F.D.O.T CONCRETE MONUMENT WITH A BRASS DISK STAMPED BM 342

Distance and Direction from Nearest Intersection: 1.8 MILES WEST ALONG S.R. 80 FROM THE INTERSECTION OF LEXINGTON PARKWAY AND STATE ROAD 80

Field Location Sketch

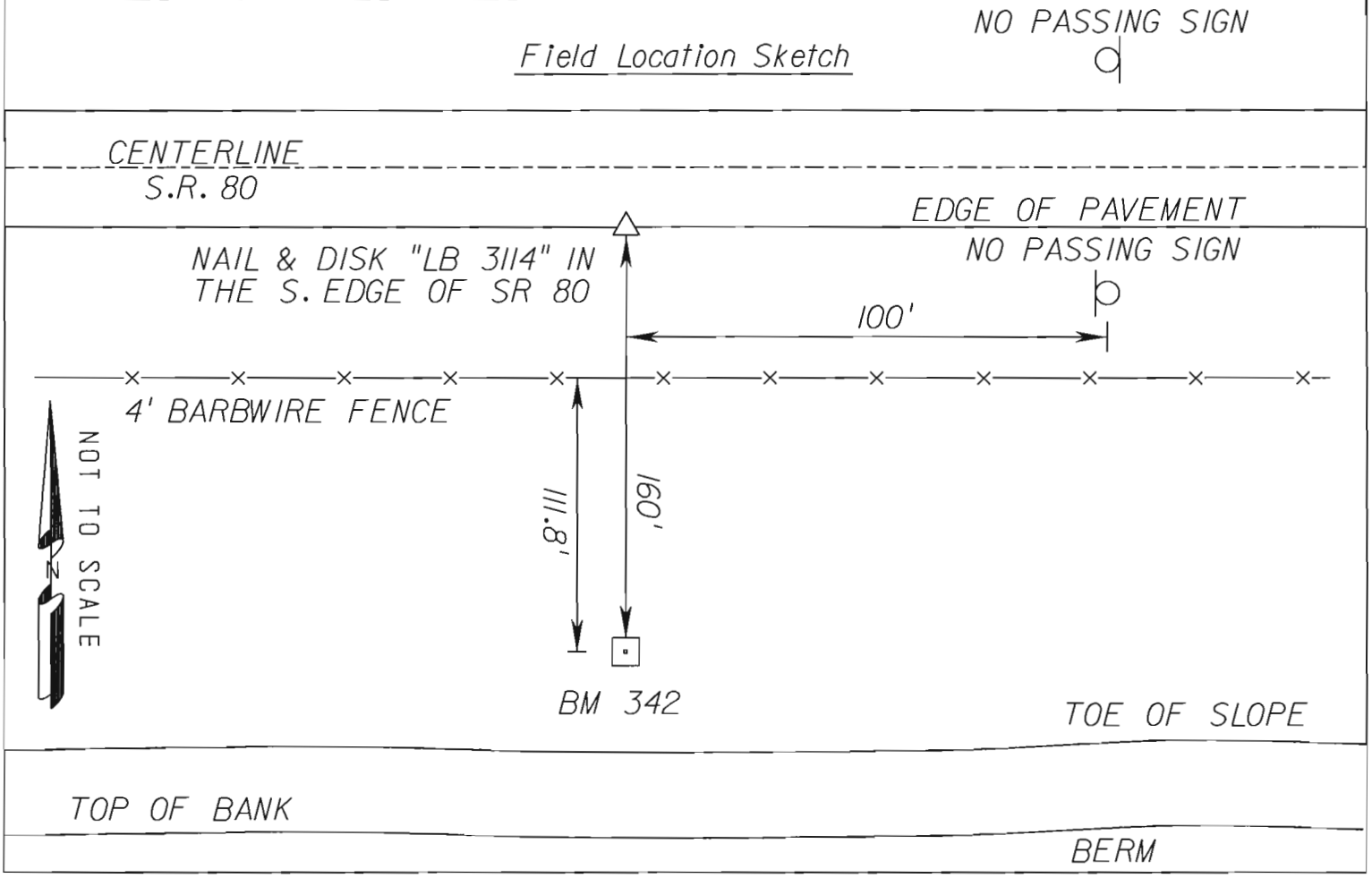

Florida Department of Transportation District One

Vertical Control Data Sheet

DATUM

NGVD 1929 X

NAVD 1988 ___

Monument Name or Designation: BM 343 Elevation feet: 17.549

State Road No.: S.R. 80 County: HENDRY

Section: 1 Township: 43S Range: 30E Roadway Section I.D.: 07010-000

Establishing Firm: AIM ENGINEERING Field Book No.: 502130

Established: / / Recovered: 02 / 09 / 11 Financial Project ID: 408286-5

State Plane Coordinates:
(Nearest Foot) N (Y): = 884939 E (X): = 562052

Base Line Station and Offset: STA. 988+89 179' RT

Description of Monument: FOUND STANDARD 4"X4" F.D.O.T CONCRETE MONUMENT WITH A BRASS DISK STAMPED BM 343

Distance and Direction from Nearest Intersection: 1.6 MILES WEST ALONG S.R. 80 FROM THE INTERSECTION OF LEXINGTON PARKWAY AND STATE ROAD 80

Field Location Sketch

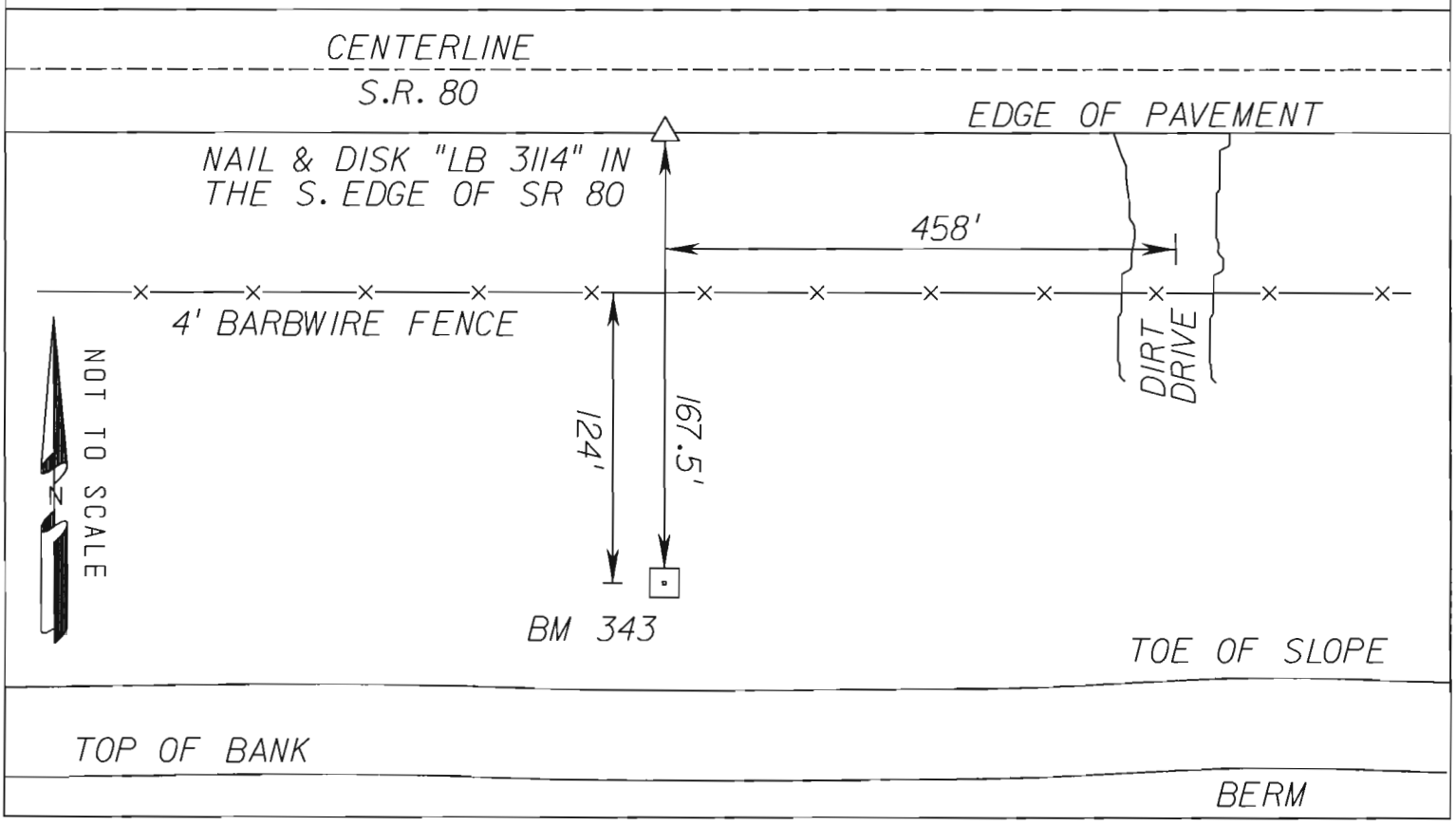

Florida Department of Transportation District One

Vertical Control Data Sheet

DATUM

NGVD 1929 X

NAVD 1988 ___

Monument Name or Designation: BM 344 Elevation feet: 17.386

State Road No.: S.R. 80 County: HENDRY

Section: 1 Township: 43S Range: 30E Roadway Section I.D.: 07010-000

Establishing Firm: AIM ENGINEERING Field Book No.: 502130

Established: / / Recovered: 02 / 09 / 11 Financial Project ID: 408286-5

State Plane Coordinates:
(Nearest Foot) N (Y): = 884955 E (X): = 563060

Base Line Station and Offset: STA. 998+98 159' RT

Description of Monument: FOUND STANDARD 4"X4" F.D.O.T CONCRETE MONUMENT WITH A BRASS DISK STAMPED BM 344

Distance and Direction from Nearest Intersection: 1.4 MILES WEST ALONG S.R. 80 FROM THE INTERSECTION OF LEXINGTON PARKWAY AND STATE ROAD 80

Field Location Sketch

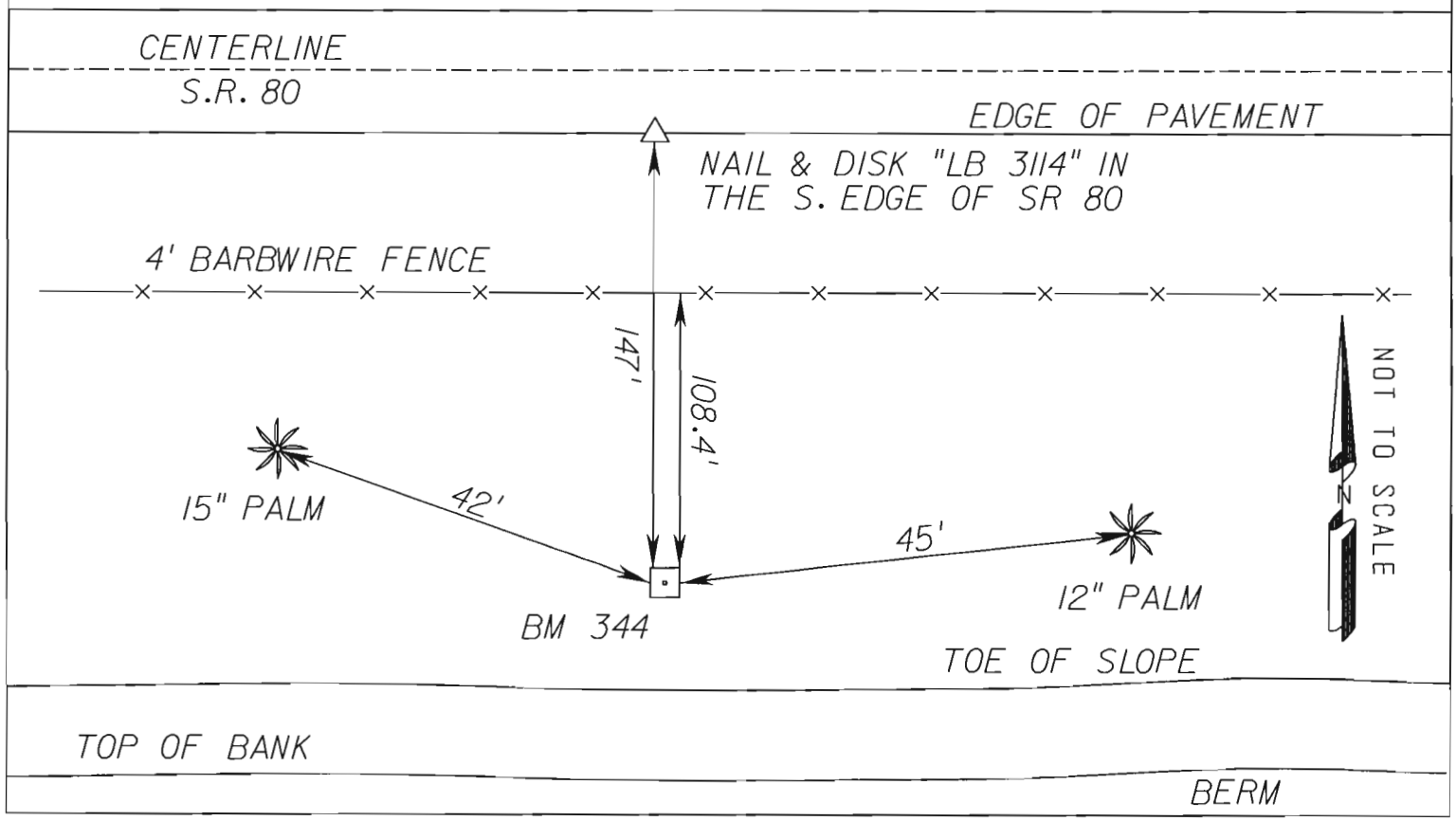

Florida Department of Transportation District One

Vertical Control Data Sheet

DATUM

NGVD 1929 X

NAVD 1988 ___

Monument Name or Designation: BM 345 Elevation feet: 17.259

State Road No.: S.R. 80 County: HENDRY

Section: 1 Township: 43S Range: 30E Roadway Section I.D.: 07010-000

Establishing Firm: AIM ENGINEERING Field Book No.: 502130

Established: / / Recovered: 02 / 09 / 11 Financial Project ID: 408286-5

State Plane Coordinates:
(Nearest Foot) N (Y): = 884946 E (X): = 564047

Base Line Station and Offset: STA. 1008+85 161' RT

Description of Monument: FOUND STANDARD 4"X4" F.D.O.T CONCRETE MONUMENT WITH A BRASS DISK STAMPED BM 345

Distance and Direction from Nearest Intersection: 1.2 MILES WEST ALONG S.R. 80 FROM THE INTERSECTION OF LEXINGTON PARKWAY AND STATE ROAD 80

Field Location Sketch

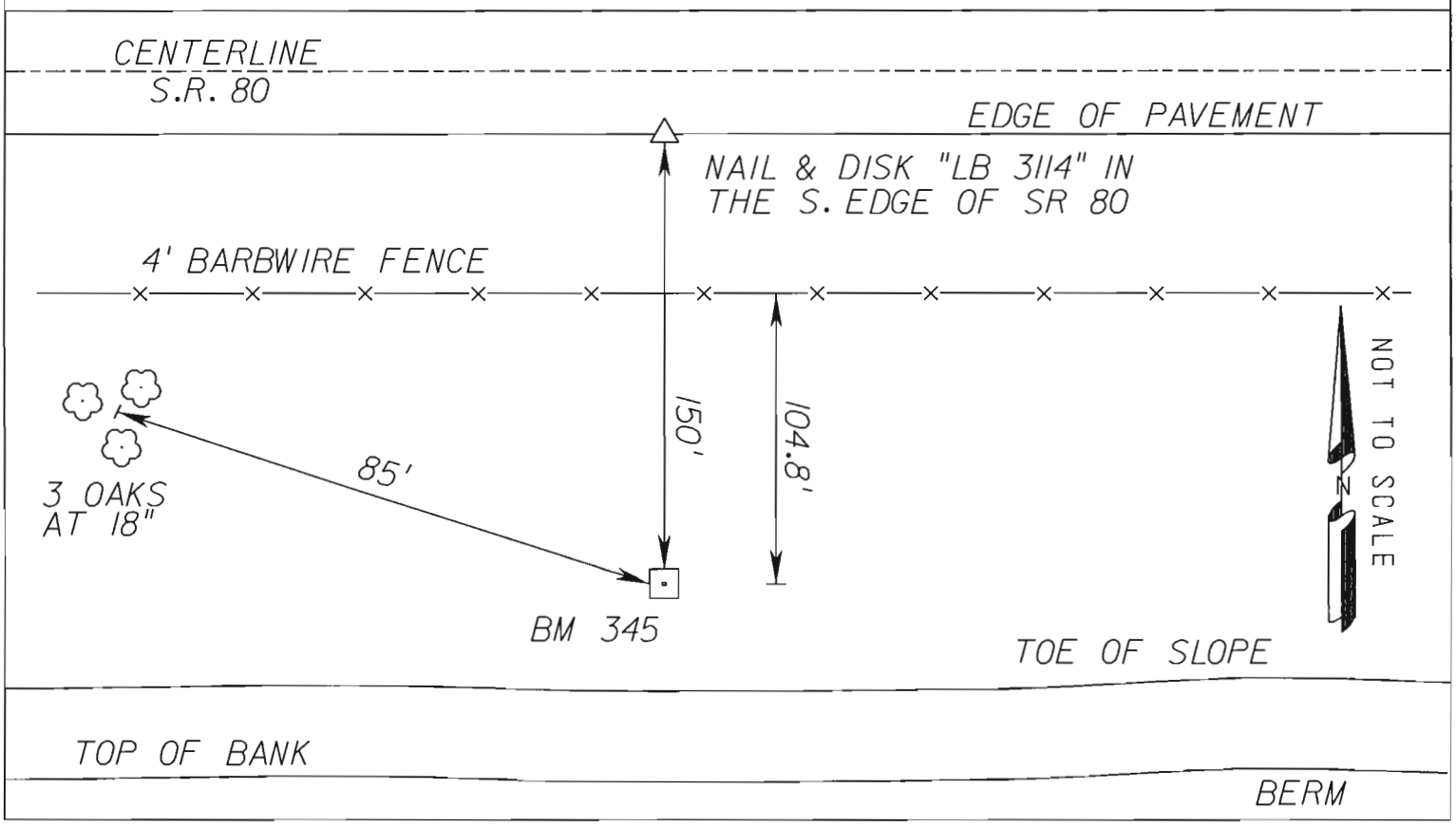

Florida Department of Transportation District One

Vertical Control Data Sheet

DATUM

NGVD 1929 X

NAVD 1988 ___

Monument Name or Designation: W 72 RESET Elevation feet: 17.480

State Road No.: S.R. 80 County: GLADES

Section: 36 Township: 42S Range: 30E Roadway Section I.D.: 07010-000

Establishing Firm: NATIONAL GEODETIC SURVEY Field Book No.: 502130

Established: / / Recovered: 02 / 09 / 11 Financial Project ID: 408286-5

State Plane Coordinates:
(Nearest Foot) N (Y): = 885154 E (X): = 564259

Base Line Station and Offset: STA. 1010+95 49' LT

Description of Monument: NATIONAL GEODETIC SURVEY BRASS DISC SET IN TOP OF A 6" X 6" CONCRETE MONUMENT STAMPED W 72 RESET

Distance and Direction from Nearest Intersection: 1.2 MILES WEST ALONG S.R. 80 FROM THE INTERSECTION OF LEXINGTON PARKWAY AND STATE ROAD 80

Field Location Sketch

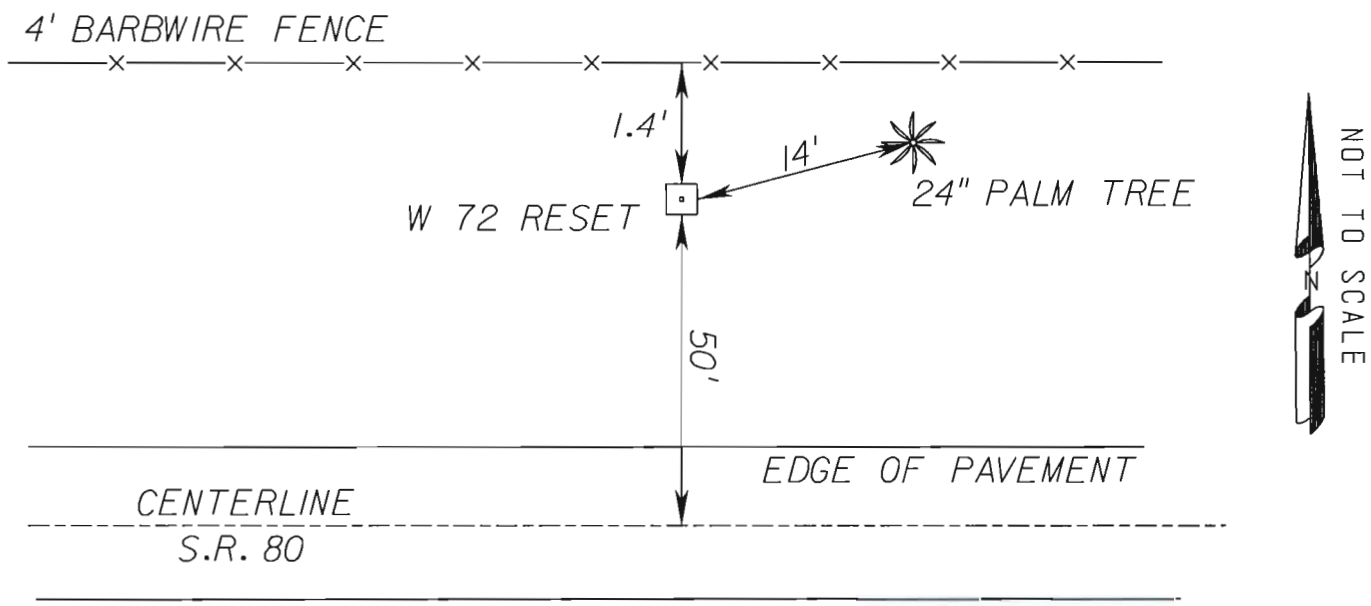

The NGS Data Sheet

See file dsdata.txt for more information about the datasheet.

```
DATABASE =  ,PROGRAM = datasheet, VERSION = 7.85
1         National Geodetic Survey,   Retrieval Date = FEBRUARY  4, 2011
 AD5623 ***********************************************************************
 AD5623  CBN         -  This is a Cooperative Base Network Control Station.
 AD5623  DESIGNATION -  W 72 RESET
 AD5623  PID         -  AD5623
 AD5623  STATE/COUNTY-  FL/GLADES
 AD5623  USGS QUAD   -  GOODNO (1973)
 AD5623
 AD5623                        *CURRENT SURVEY CONTROL
 AD5623  ___________________________________________________________________
 AD5623* NAD 83(2007)-  26 46 06.91299(N)    081 16 54.05079(W)     ADJUSTED
 AD5623* NAVD 88     -         4.933  (meters)      16.18   (feet)  ADJUSTED
 AD5623  ___________________________________________________________________
 AD5623  EPOCH DATE  -        2002.00
 AD5623  X           -     863,755.220 (meters)                     COMP
 AD5623  Y           -  -5,632,620.388 (meters)                     COMP
 AD5623  Z           -   2,855,337.062 (meters)                     COMP
 AD5623  LAPLACE CORR-          -0.29  (seconds)                    DEFLEC09
 AD5623  ELLIP HEIGHT-         -19.550 (meters)          (02/10/07) ADJUSTED
 AD5623  GEOID HEIGHT-         -24.44  (meters)                     GEOID09
 AD5623  DYNAMIC HT  -           4.925 (meters)      16.16  (feet)  COMP
 AD5623
 AD5623  ------- Accuracy Estimates (at 95% Confidence Level in cm) --------
 AD5623  Type    PID    Designation                      North   East  Ellip
 AD5623  ___________________________________________________________________
 AD5623  NETWORK AD5623 W 72 RESET                        1.74   2.53   6.70
 AD5623  ___________________________________________________________________
 AD5623  MODELED GRAV-     979,105.4   (mgal)                      NAVD 88
 AD5623
 AD5623  VERT ORDER  -  FIRST     CLASS II
 AD5623
 AD5623.The horizontal coordinates were established by GPS observations
 AD5623.and adjusted by the National Geodetic Survey in February 2007.
 AD5623
 AD5623.The datum tag of NAD 83(2007) is equivalent to NAD 83(NSRS2007).
 AD5623.See National Readjustment for more information.
 AD5623.The horizontal coordinates are valid at the epoch date displayed above.
 AD5623.The epoch date for horizontal control is a decimal equivalence
 AD5623.of Year/Month/Day.
 AD5623
 AD5623.The orthometric height was determined by differential leveling and
 AD5623.adjusted in September 1992.
 AD5623
 AD5623.Photographs are available for this station.
 AD5623
 AD5623.The X, Y, and Z were computed from the position and the ellipsoidal ht.
 AD5623
 AD5623.The Laplace correction was computed from DEFLEC09 derived deflections.
 AD5623
 AD5623.The ellipsoidal height was determined by GPS observations
 AD5623.and is referenced to NAD 83.
```

```
AD5623
AD5623.The geoid height was determined by GEOID09.
AD5623
AD5623.The dynamic height is computed by dividing the NAVD 88
AD5623.geopotential number by the normal gravity value computed on the
AD5623.Geodetic Reference System of 1980 (GRS 80) ellipsoid at 45
AD5623.degrees latitude (g = 980.6199 gals.).
AD5623
AD5623.The modeled gravity was interpolated from observed gravity values.
AD5623
AD5623;                    North          East     Units Scale Factor Converg.
AD5623;SPC FL E     -   269,795.613   171,986.384   MT  0.99995086   -0 07 36.7
AD5623;SPC FL E     -   885,154.44    564,258.66   sFT  0.99995086   -0 07 36.7
AD5623;UTM  17      - 2,960,835.542   471,995.942   MT  0.99960968   -0 07 36.7
AD5623
AD5623!             -  Elev Factor  x  Scale Factor =   Combined Factor
AD5623!SPC FL E     -   1.00000307  x   0.99995086  =   0.99995393
AD5623!UTM  17      -   1.00000307  x   0.99960968  =   0.99961275
AD5623
AD5623                          SUPERSEDED SURVEY CONTROL
AD5623
AD5623  NAD 83(1999)-  26 46 06.91313(N)    081 16 54.05098(W) AD(       ) B
AD5623  ELLIP H (05/31/01)  -19.547  (m)                       GP(       ) 5 1
AD5623  ELLIP H (06/02/94)  -19.540  (m)                       GP(       ) 3 1
AD5623  NAD 83(1990)-  26 46 06.91145(N)    081 16 54.04986(W) AD(       ) B
AD5623  ELLIP H (09/13/90)  -19.629  (m)                       GP(       ) 4 1
AD5623  NAVD 88 (06/02/94)    4.93   (m)           16.2    (f) LEVELING    3
AD5623  NGVD 29 (09/01/92)    5.327  (m)           17.48   (f) ADJUSTED    1 2
AD5623
AD5623.Superseded values are not recommended for survey control.
AD5623.NGS no longer adjusts projects to the NAD 27 or NGVD 29 datums.
AD5623.See file dsdata.txt to determine how the superseded data were derived.
AD5623
AD5623_U.S. NATIONAL GRID SPATIAL ADDRESS: 17RMK7199560835(NAD 83)
AD5623_MARKER: DB = BENCH MARK DISK
AD5623_SETTING: 7 = SET IN TOP OF CONCRETE MONUMENT
AD5623_SP_SET: CONCRETE POST
AD5623_STAMPING: W 72 RESET 1959
AD5623_MARK LOGO: CGS
AD5623_MAGNETIC: N = NO MAGNETIC MATERIAL
AD5623_STABILITY: B = PROBABLY HOLD POSITION/ELEVATION WELL
AD5623_SATELLITE: THE SITE LOCATION WAS REPORTED AS SUITABLE FOR
AD5623+SATELLITE: SATELLITE OBSERVATIONS - November 19, 2007
AD5623
AD5623  HISTORY     - Date     Condition        Report By
AD5623  HISTORY     - 1959     MONUMENTED       CGS
AD5623  HISTORY     - 1989     GOOD             NGS
AD5623  HISTORY     - 19920401 GOOD             NGS
AD5623  HISTORY     - 19930218 GOOD             NGS
AD5623  HISTORY     - 20040826 GOOD             JCLS
AD5623  HISTORY     - 20071119 GOOD             NGS
AD5623
AD5623                          STATION DESCRIPTION
AD5623
AD5623'DESCRIBED BY COAST AND GEODETIC SURVEY 1959
AD5623'2 MI E FROM GOODNO.
AD5623'2.0 MILES EAST ALONG STATE HIGHWAY 80 FROM THE CROSSING OF THE
AD5623'ATLANTIC COAST LINE RAILROAD AT GOODNO, 0.15 MILE EAST OF A T
AD5623'FENCE CORNER, 0.1 MILE WEST OF ANOTHER T FENCE CORNER, 49 FT.
AD5623'NORTH OF THE CENTER LINE OF THE HIGHWAY, 20.5 FT. WEST OF A
AD5623'TELEPHONE POLE, 2.7 FT. WEST OF A STEEL WITNESS POST, SET IN
AD5623'THE TOP OF A CONCRETE POST WHICH PROJECTS 0.3 FT. ABOVE THE
AD5623'GROUND.
```

```
AD5623
AD5623                          STATION RECOVERY (1989)
AD5623
AD5623'RECOVERY NOTE BY NATIONAL GEODETIC SURVEY 1989
AD5623'THE STATION IS LOCATED ABOUT 16.4 KM (10.20 MI) EAST OF LA BELLE, IN
AD5623'THE NORTH RIGHT-OF-WAY OF STATE ROUTE 80 AND 3.1 KM (1.95 MI) EAST OF
AD5623'A RAILROAD CROSSING AT GOODNO.  OWNERSHIP--STATE OF FLORIDA.
AD5623'TO REACH THE STATION FROM THE JUNCTION OF STATE ROUTE 80 AND STATE
AD5623'ROUTE 29 SOUTH IN THE MIDDLE OF LA BELLE, GO EAST ALONG STATE ROUTE 80
AD5623'FOR 16.4 KM (10.20 MI) TO THE STATION ON THE LEFT.
AD5623'THE STATION PROJECTS 5 CM ABOVE GROUND.  LOCATED 15.2 M (49.9 FT)
AD5623'NORTH OF THE CENTERLINE OF THE HIGHWAY, 4.7 M (15.4 FT) WEST OF A
AD5623'24-INCH PALM TREE, 0.33 M (1.1 FT) SOUTH OF A FENCE LINE, 0.33 M
AD5623'(1.1 FT) SOUTHWEST FROM A METAL WITNESS POST AND ABOUT 0.51 M
AD5623'(1.7 FT) BELOW THE LEVEL OF THE HIGHWAY.
AD5623'DESCRIBED BY G.F. SMITH.
AD5623
AD5623                          STATION RECOVERY (1992)
AD5623
AD5623'RECOVERY NOTE BY NATIONAL GEODETIC SURVEY 1992
AD5623'15.7 KM (9.75 MI) EASTERLY ALONG STATE HIGHWAY 80 FROM THE COUNTY
AD5623'COURTHOUSE IN LA BELLE, 1.0 KM (0.60 MI) WEST OF A HIGHWAY BRIDGE
AD5623'SPANNING LONG HAMMOCK CREEK, 46.9 M (153.9 FT) WEST OF UTILITY POLE
AD5623'NUMBER 492 544 CKT 4 B WITH 2 GUY CABLES AND A TRANSFORMER, 15.1 M
AD5623'(49.5 FT) NORTH OF THE HIGHWAY CENTERLINE, 0.9 M (3.0 FT) BELOW THE
AD5623'LEVEL OF THE HIGHWAY, 0.4 M (1.3 FT) SOUTH OF A WITNESS POST AND
AD5623'FENCE, 0.3 M (1.0 FT) WEST OF A WITNESS POST, AND THE MONUMENT
AD5623'PROJECTS 0.06 M (0.20 FT) ABOVE THE GROUND SURFACE.  NOTE--THE
AD5623'MONUMENT HAS BEEN HIT AND IS CHIPPED ON THE NORTHWEST CORNER, BUT IS
AD5623'SOLID IN PLACE.
AD5623
AD5623                          STATION RECOVERY (1993)
AD5623
AD5623'RECOVERY NOTE BY NATIONAL GEODETIC SURVEY 1993
AD5623'THE STATION IS LOCATED ABOUT 15.2 KM (9.45 MI) EAST OF LA BELLE, IN
AD5623'THE NORTH RIGHT OF WAY OF STATE HIGHWAY 80.  OWNERSHIP--HIGHWAY RIGHT
AD5623'OF WAY.
AD5623'TO REACH THE STATION FROM THE JUNCTION OF STATE HIGHWAY 80 AND STATE
AD5623'HIGHWAY 29 SOUTH IN THE MIDDLE OF LA BELLE, GO EAST ON STATE HIGHWAY
AD5623'80 FOR 4.82 KM (3.00 MI) TO THE ENTRANCE TO THE PORT LA BELLE GOLF
AD5623'COURSE.  CONTINUE AHEAD EAST ON STATE HIGHWAY 80 FOR 8.5 KM
AD5623'(5.30 MI) TO DALTON LANE.  CONTINUE AHEAD EAST ON STATE HIGHWAY 80
AD5623'FOR 1.12 KM (0.70 MI) TO WELLINGTON PARKWAY.  CONTINUE AHEAD EAST ON
AD5623'STATE HIGHWAY 80 FOR 1.3 KM (0.80 MI) TO THE STATION ON THE LEFT.
AD5623'STATION DISK PROJECTS 5 CM ABOVE GROUND.  LOCATED 15.2 M (49.9 FT)
AD5623'NORTH OF THE CENTERLINE OF THE HIGHWAY, 4.4 M (14.4 FT) WEST OF A
AD5623'24-INCH PALM TREE, 0.41 M (1.35 FT) SOUTH OF A FENCELINE, 0.31 M
AD5623'(1.02 FT) SOUTH OF A CARSONITE WITNESS POST AND ABOUT 0.51 M
AD5623'(1.67 FT) BELOW THE LEVEL OF THE HIGHWAY.
AD5623'NOTE, 1989 DESCRIPTION STATES THERE IS A RAILROAD CROSSING. THERE IS
AD5623'NO RAILROAD CROSSING.  THE RAILS HAVE BEEN TAKEN OUT.
AD5623
AD5623                          STATION RECOVERY (2004)
AD5623
AD5623'RECOVERY NOTE BY JOHN CHANCE LAND SURVEYS INC 2004 (FJO)
AD5623'RECOVERED IN GOOD CONDITION.
AD5623
AD5623                          STATION RECOVERY (2007)
AD5623
AD5623'RECOVERY NOTE BY NATIONAL GEODETIC SURVEY 2007 (DR)
AD5623'RECOVERED AS DESCRIBED

*** retrieval complete.
```

Florida Department of Transportation District One

Vertical Control Data Sheet

DATUM

NGVD 1929 X

NAVD 1988 ___

Monument Name or Designation: BM 346 Elevation feet: 15.395

State Road No.: S.R. 80 County: HENDRY

Section: 1 Township: 43S Range: 30E Roadway Section I.D.: 07010-000

Establishing Firm: AIM ENGINEERING Field Book No.: 502130

Established: / / Recovered: 02 / 09 / 11 Financial Project ID: 408286-5

State Plane Coordinates:
(Nearest Foot) N (Y): = 884916 E (X): = 565013

Base Line Station and Offset: STA. 1018+51 185' RT

Description of Monument: FOUND STANDARD 4"X4" F.D.O.T CONCRETE MONUMENT WITH A BRASS DISK STAMPED BM 346

Distance and Direction from Nearest Intersection: 1.1 MILES WEST ALONG S.R. 80 FROM THE INTERSECTION OF LEXINGTON PARKWAY AND STATE ROAD 80

Field Location Sketch

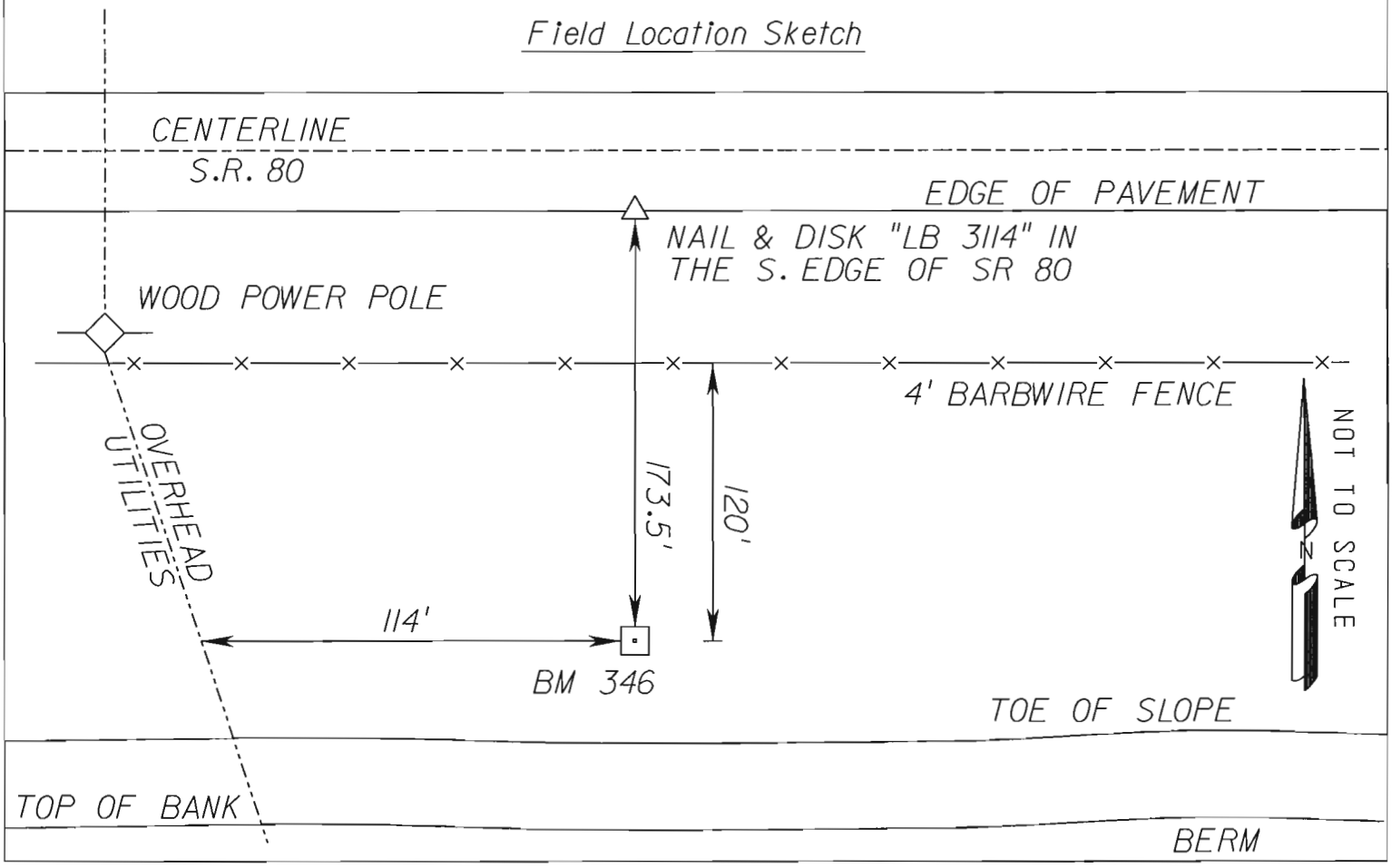

Florida Department of Transportation District One

Vertical Control Data Sheet

DATUM

NGVD 1929 X

NAVD 1988 ___

Monument Name or Designation: BM 347 Elevation feet: 15.974

State Road No.: S.R. 80 County: HENDRY

Section: 6 Township: 43S Range: 31E Roadway Section I.D.: 07010-000

Establishing Firm: AIM ENGINEERING Field Book No. 502130

Established: / / Recovered: 02 / 09 / 11 Financial Project ID: 408286-5

State Plane Coordinates:
(Nearest Foot) N (Y): = 884916 E (X): = 566029

Base Line Station and Offset: STA. 1028+67 177' RT

Description of Monument: FOUND STANDARD 4"X4" F.D.O.T CONCRETE MONUMENT WITH A BRASS DISK STAMPED BM 347

Distance and Direction from Nearest Intersection: 0.9 MILES WEST ALONG S.R. 80 FROM THE INTERSECTION OF LEXINGTON PARKWAY AND STATE ROAD 80

Field Location Sketch

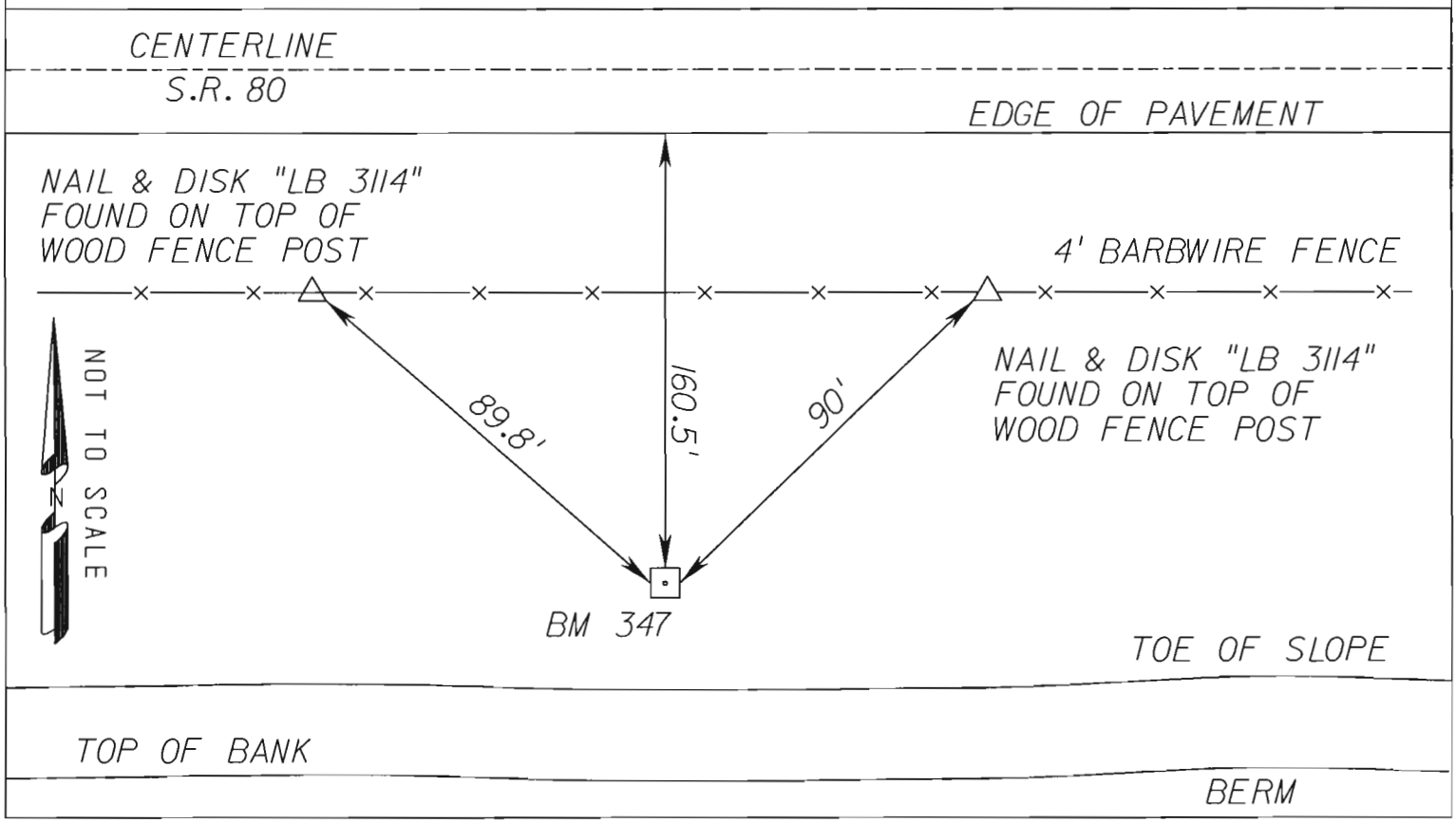

Florida Department of Transportation District One

Vertical Control Data Sheet

DATUM

NGVD 1929 X

NAVD 1988 ___

Monument Name or Designation: BM 348 Elevation feet: 14.285

State Road No.: S.R. 80 County: HENDRY

Section: 6 Township: 43S Range: 31E Roadway Section I.D.: 07010-000

Establishing Firm: AIM ENGINEERING Field Book No. 502130

Established: / / Recovered: 02 / 09 / 11 Financial Project ID: 408286-5

State Plane Coordinates:
(Nearest Foot) N (Y): = 884904 E (X): = 567018

Base Line Station and Offset: STA. 1038+56 183' RT

Description of Monument: FOUND STANDARD 4"X4" F.D.O.T CONCRETE MONUMENT WITH A BRASS DISK STAMPED BM 348

Distance and Direction from Nearest Intersection: 0.7 MILES WEST ALONG S.R. 80 FROM THE INTERSECTION OF LEXINGTON PARKWAY AND STATE ROAD 80

Field Location Sketch

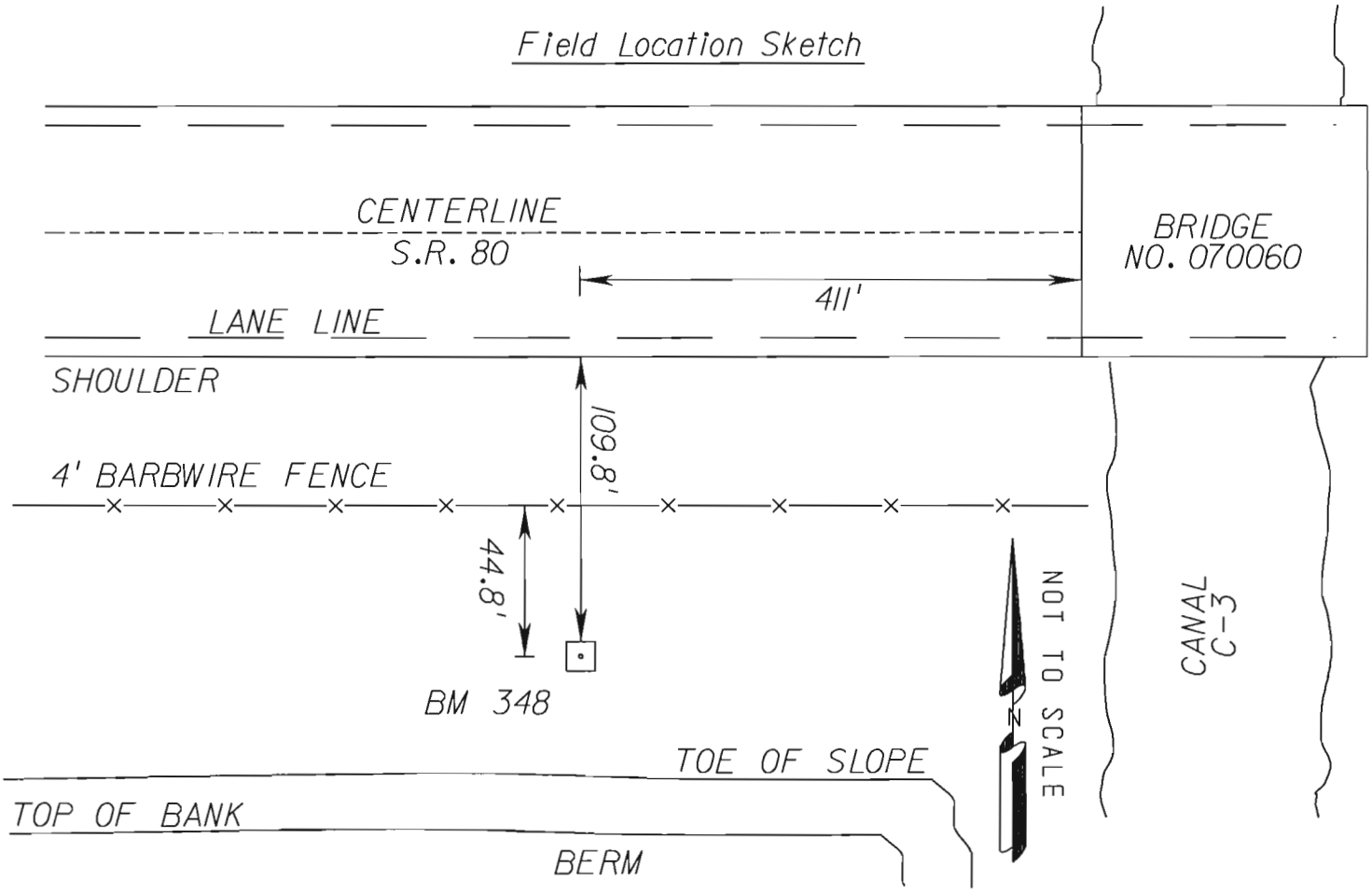

Florida Department of Transportation District One

Vertical Control Data Sheet

DATUM

NGVD 1929 X

NAVD 1988 ___

Monument Name or Designation: BM 349 Elevation feet: 14.227

State Road No.: S.R. 80 County: GLADES

Section: 31 Township: 42S Range: 31E Roadway Section I.D.: 07010-000

Establishing Firm: AIM ENGINEERING Field Book No. 502130

Established: / / Recovered: 02 / 09 / 11 Financial Project ID: 408286-5

State Plane Coordinates:
(Nearest Foot) N (Y): = 885127 E (X): = 568030

Base Line Station and Offset: STA. 1048+66 45' LT

Description of Monument: FOUND STANDARD 4"X4" F.D.O.T CONCRETE MONUMENT WITH A BRASS DISK STAMPED BM 349

Distance and Direction from Nearest Intersection: 0.5 MILES WEST ALONG S.R. 80 FROM THE INTERSECTION OF LEXINGTON PARKWAY AND STATE ROAD 80

Field Location Sketch

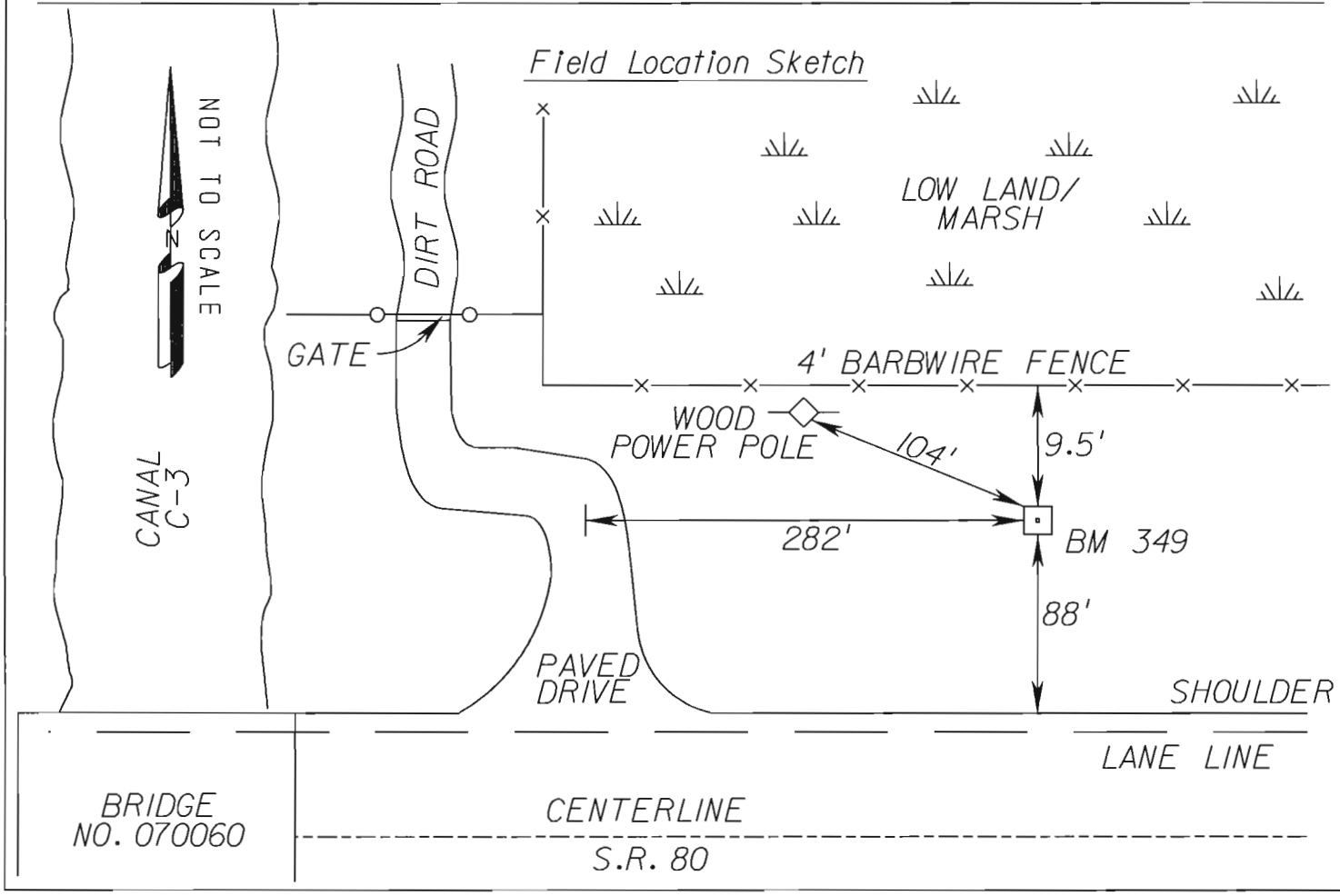

Florida Department of Transportation District One

Vertical Control Data Sheet

DATUM

NGVD 1929 X

NAVD 1988 ___

Monument Name or Designation: BM 350 Elevation feet: 14.739

State Road No.: S.R. 80 County: GLADES

Section: 31 Township: 42S Range: 31E Roadway Section I.D.: 07010-000

Establishing Firm: AIM ENGINEERING Field Book No. 502130

Established: / / Recovered: 02 / 09 / 11 Financial Project ID: 408286-5

State Plane Coordinates:
(Nearest Foot) N (Y): = 885126 E (X): = 569028

Base Line Station and Offset: STA. 1058+64 49' LT

Description of Monument: FOUND STANDARD 4"X4" F.D.O.T CONCRETE MONUMENT WITH A BRASS DISK STAMPED BM 350

Distance and Direction from Nearest Intersection: 0.3 MILES WEST ALONG S.R. 80 FROM THE INTERSECTION OF LEXINGTON PARKWAY AND STATE ROAD 80

Field Location Sketch

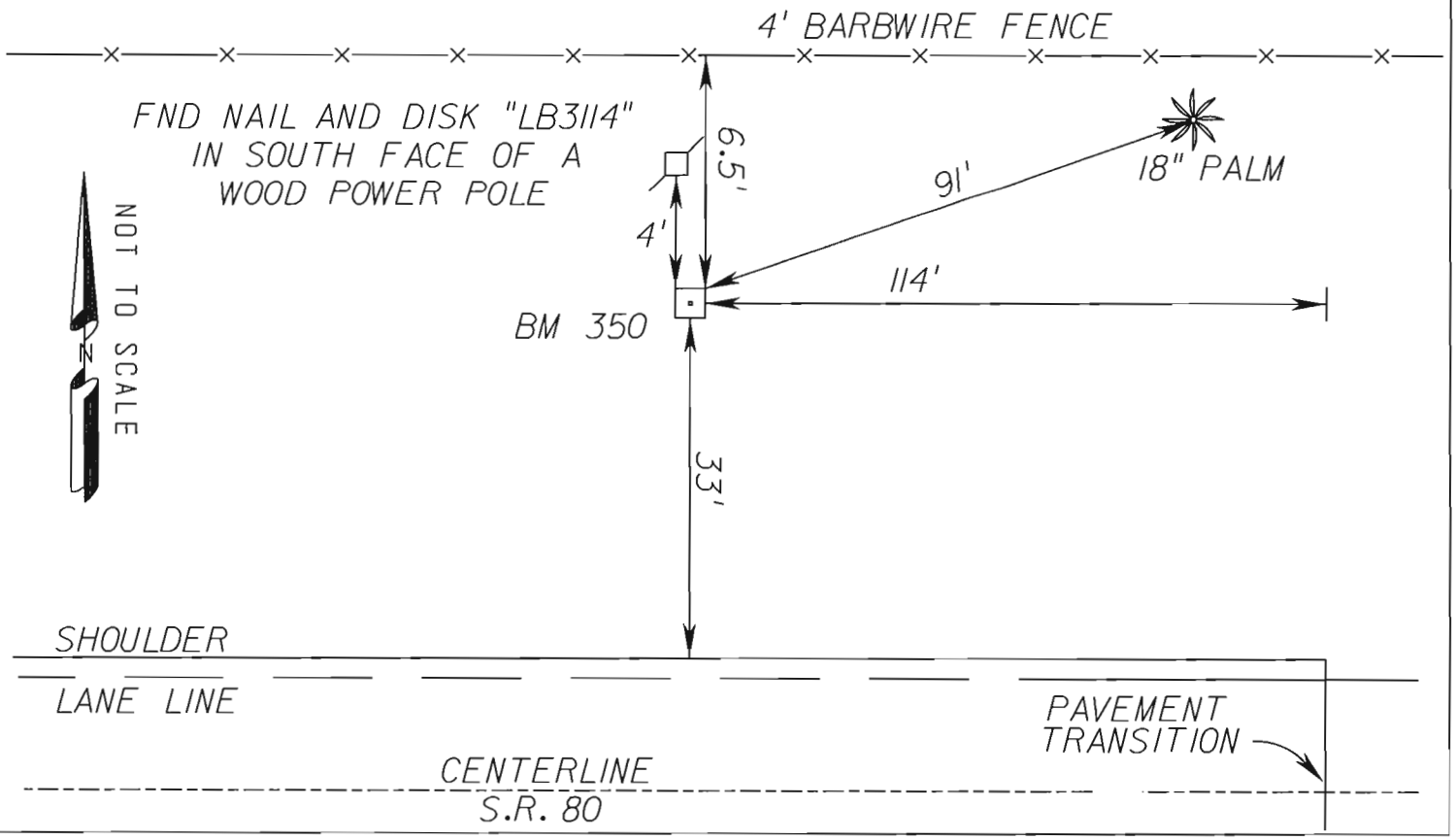

Florida Department of Transportation District One

Vertical Control Data Sheet

DATUM

NGVD 1929 X

NAVD 1988 ___

Monument Name or Designation: R 414 Elevation feet: 15.030

State Road No.: S.R. 80 County: GLADES

Section: 31 Township: 42S Range: 31E Roadway Section I.D.: 07010-000

Establishing Firm: NATIONAL GEODETIC SURVEY Field Book No.: 502130

Established: / / Recovered: 02 / 09 / 11 Financial Project ID: 408286-5

State Plane Coordinates:
(Nearest Foot) N (Y): = 885119 E (X): = 569825

Base Line Station and Offset: STA. 1066+61 45' LT

Description of Monument: STAINLESS STEEL ROD IN SLEEVE STAMPED R 414 1992

Distance and Direction from Nearest Intersection: 0.1 MILES WEST ALONG S.R. 80 FROM THE INTERSECTION OF LEXINGTON PARKWAY AND STATE ROAD 80

Field Location Sketch

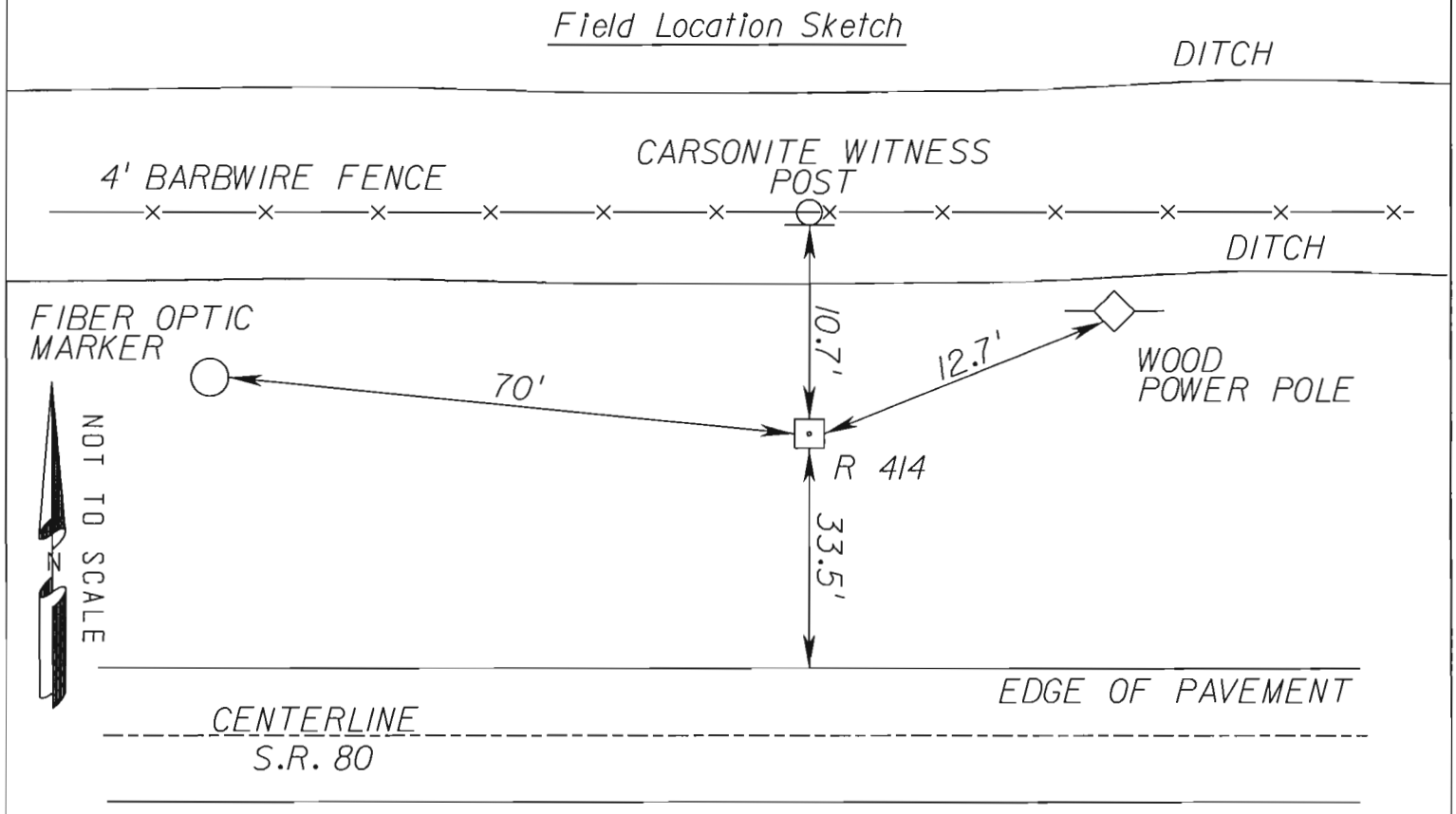

The NGS Data Sheet

See file dsdata.txt for more information about the datasheet.

```
DATABASE =  ,PROGRAM = datasheet, VERSION = 7.85
1         National Geodetic Survey,   Retrieval Date = FEBRUARY  4, 2011
 AD8261 ***********************************************************************
 AD8261  DESIGNATION -  R 414
 AD8261  PID         -  AD8261
 AD8261  STATE/COUNTY-  FL/HENDRY
 AD8261  USGS QUAD   -  GOODNO (1973)
 AD8261
 AD8261                        *CURRENT SURVEY CONTROL
 AD8261
 AD8261* NAD 83(1986)-  26 46 06.     (N)    081 15 52.     (W)     SCALED
 AD8261* NAVD 88     -         4.187  (meters)      13.74   (feet)  ADJUSTED
 AD8261
 AD8261  GEOID HEIGHT-        -24.44  (meters)                       GEOID09
 AD8261  DYNAMIC HT  -          4.181 (meters)      13.72   (feet)  COMP
 AD8261  MODELED GRAV-     979,106.5  (mgal)                        NAVD 88
 AD8261
 AD8261  VERT ORDER  -  FIRST     CLASS II
 AD8261
 AD8261.The horizontal coordinates were scaled from a topographic map and have
 AD8261.an estimated accuracy of +/- 6 seconds.
 AD8261
 AD8261.The orthometric height was determined by differential leveling and
 AD8261.adjusted in September 1992.
 AD8261
 AD8261.The geoid height was determined by GEOID09.
 AD8261
 AD8261.The dynamic height is computed by dividing the NAVD 88
 AD8261.geopotential number by the normal gravity value computed on the
 AD8261.Geodetic Reference System of 1980 (GRS 80) ellipsoid at 45
 AD8261.degrees latitude (g = 980.6199 gals.).
 AD8261
 AD8261.The modeled gravity was interpolated from observed gravity values.
 AD8261
 AD8261;                    North         East     Units  Estimated Accuracy
 AD8261;SPC FL E     -   269,760.      173,700.      MT  (+/- 180 meters Scaled)
 AD8261
 AD8261                         SUPERSEDED SURVEY CONTROL
 AD8261
 AD8261  NGVD 29 (09/01/92)    4.582  (m)           15.03   (f) ADJUSTED    1 2
 AD8261
 AD8261.Superseded values are not recommended for survey control.
 AD8261.NGS no longer adjusts projects to the NAD 27 or NGVD 29 datums.
 AD8261.See file dsdata.txt to determine how the superseded data were derived.
 AD8261
 AD8261_U.S. NATIONAL GRID SPATIAL ADDRESS: 17RMK737608(NAD 83)
 AD8261_MARKER: I = METAL ROD
 AD8261_SETTING: 49 = STAINLESS STEEL ROD W/O SLEEVE (10 FT.+)
 AD8261_SP_SET: STAINLESS STEEL ROD
 AD8261_STAMPING: R 414 1992
 AD8261_MARK LOGO: NGS
 AD8261_PROJECTION: FLUSH
```

```
AD8261_MAGNETIC: I = MARKER IS A STEEL ROD
AD8261_STABILITY: B = PROBABLY HOLD POSITION/ELEVATION WELL
AD8261_SATELLITE: THE SITE LOCATION WAS REPORTED AS NOT SUITABLE FOR
AD8261+SATELLITE: SATELLITE OBSERVATIONS - 1992
AD8261_ROD/PIPE-DEPTH: 4.9  meters
AD8261
AD8261  HISTORY     - Date     Condition        Report By
AD8261  HISTORY     - 1992     MONUMENTED       NGS
AD8261
AD8261                          STATION DESCRIPTION
AD8261
AD8261'DESCRIBED BY NATIONAL GEODETIC SURVEY 1992
AD8261'17.3 KM (10.75 MI) EASTERLY ALONG STATE HIGHWAY 80 FROM THE COUNTY
AD8261'COURTHOUSE IN LA BELLE, 14.1 M (46.3 FT) NORTH OF THE CENTERLINE OF
AD8261'THE HIGHWAY, 5.7 M (18.7 FT) EAST OF AN UNDERGROUND CABLE WARNING
AD8261'SIGN, 4.0 M (13.1 FT) SOUTHWEST OF A UTILITY POLE, 3.2 M (10.5 FT)
AD8261'SOUTH OF A WITNESS POST AND FENCE, AND 1.5 M (4.9 FT) BELOW THE LEVEL
AD8261'OF THE HIGHWAY.  NOTE--ACCESS TO THE DATUM POINT IS THROUGH A 5-INCH
AD8261'LOGO CAP.

*** retrieval complete.
Elapsed Time = 00:00:00
```

Florida Department of Transportation District One

Vertical Control Data Sheet

DATUM

NGVD 1929 X

NAVD 1988 ___

Monument Name or Designation: BM 351 Elevation feet: 16.684

State Road No.: S.R. 80 County: GLADES

Section: 31 Township: 42S Range: 31E Roadway Section I.D.: 07010-000

Establishing Firm: AIM ENGINEERING Field Book No. 502130

Established: / / Recovered: 02 / 09 / 11 Financial Project ID: 408286-5

State Plane Coordinates:
(Nearest Foot) N (Y): = 885167 E (X): = 570796

Base Line Station and Offset: STA. 1076+33 97' LT

Description of Monument: FOUND STANDARD 4"X4" F.D.O.T CONCRETE MONUMENT WITH A BRASS DISK STAMPED BM 351

Distance and Direction from Nearest Intersection: 190 FEET EAST ALONG S.R. 80 FROM THE INTERSECTION OF LEXINGTON PARKWAY AND STATE ROAD 80

Field Location Sketch

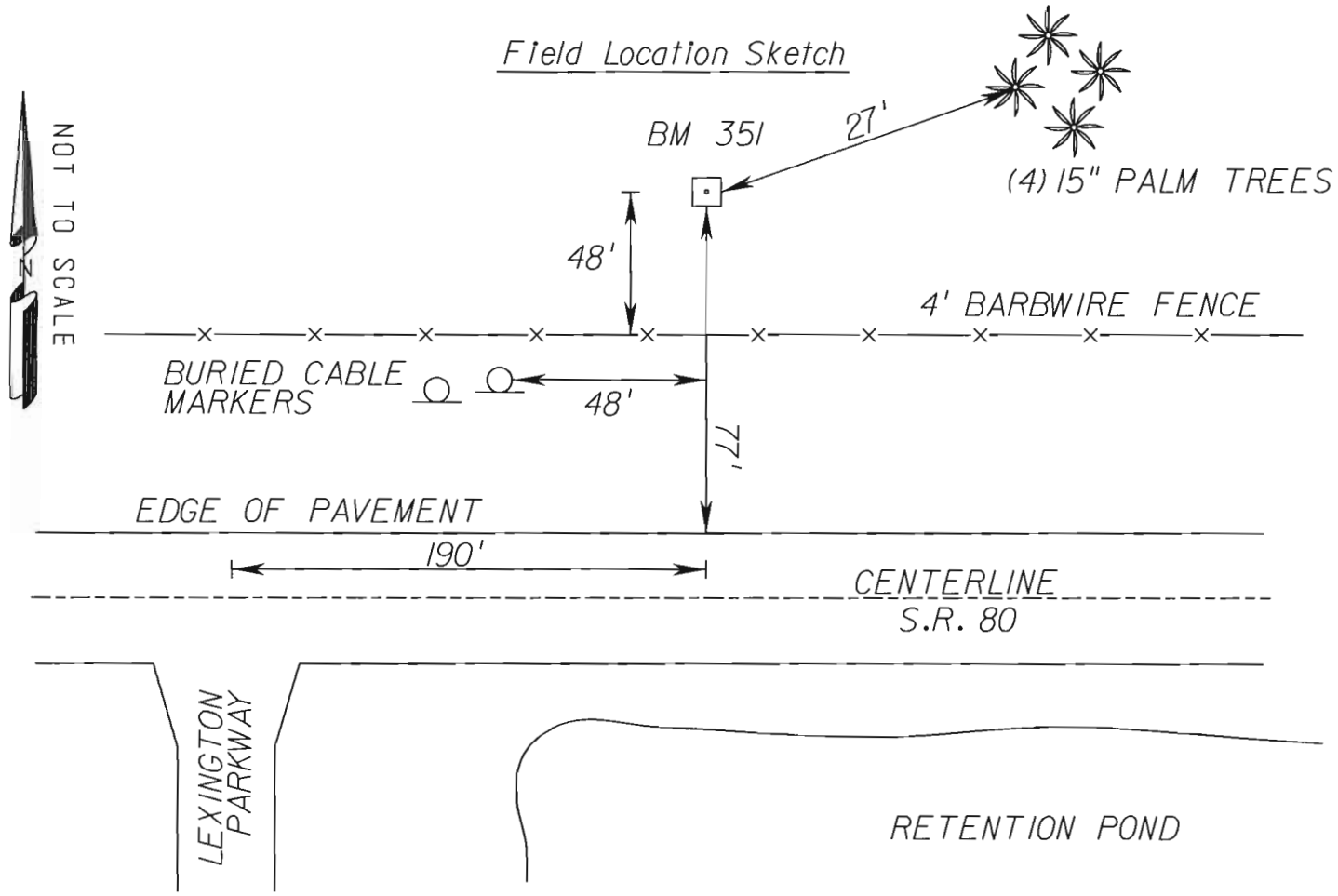

Florida Department of Transportation District One

Vertical Control Data Sheet

DATUM

NGVD 1929 X

NAVD 1988 ___

Monument Name or Designation: BM 352 Elevation feet: 17.548

State Road No.: S.R. 80 County: GLADES

Section: 31 Township: 42S Range: 31E Roadway Section I.D.: 07010-000

Establishing Firm: AIM ENGINEERING Field Book No.: 502130

Established: / / Recovered: 02 / 09 / 11 Financial Project ID: 408286-5

State Plane Coordinates:
(Nearest Foot) N (Y): = 885121 E (X): = 572064

Base Line Station and Offset: STA. 1089+00 56' LT

Description of Monument: FOUND STANDARD 4"X4" F.D.O.T CONCRETE MONUMENT WITH A BRASS DISK STAMPED BM 352

Distance and Direction from Nearest Intersection: 0.3 MILES EAST ALONG S.R. 80 FROM THE INTERSECTION OF LEXINGTON PARKWAY AND STATE ROAD 80

Field Location Sketch

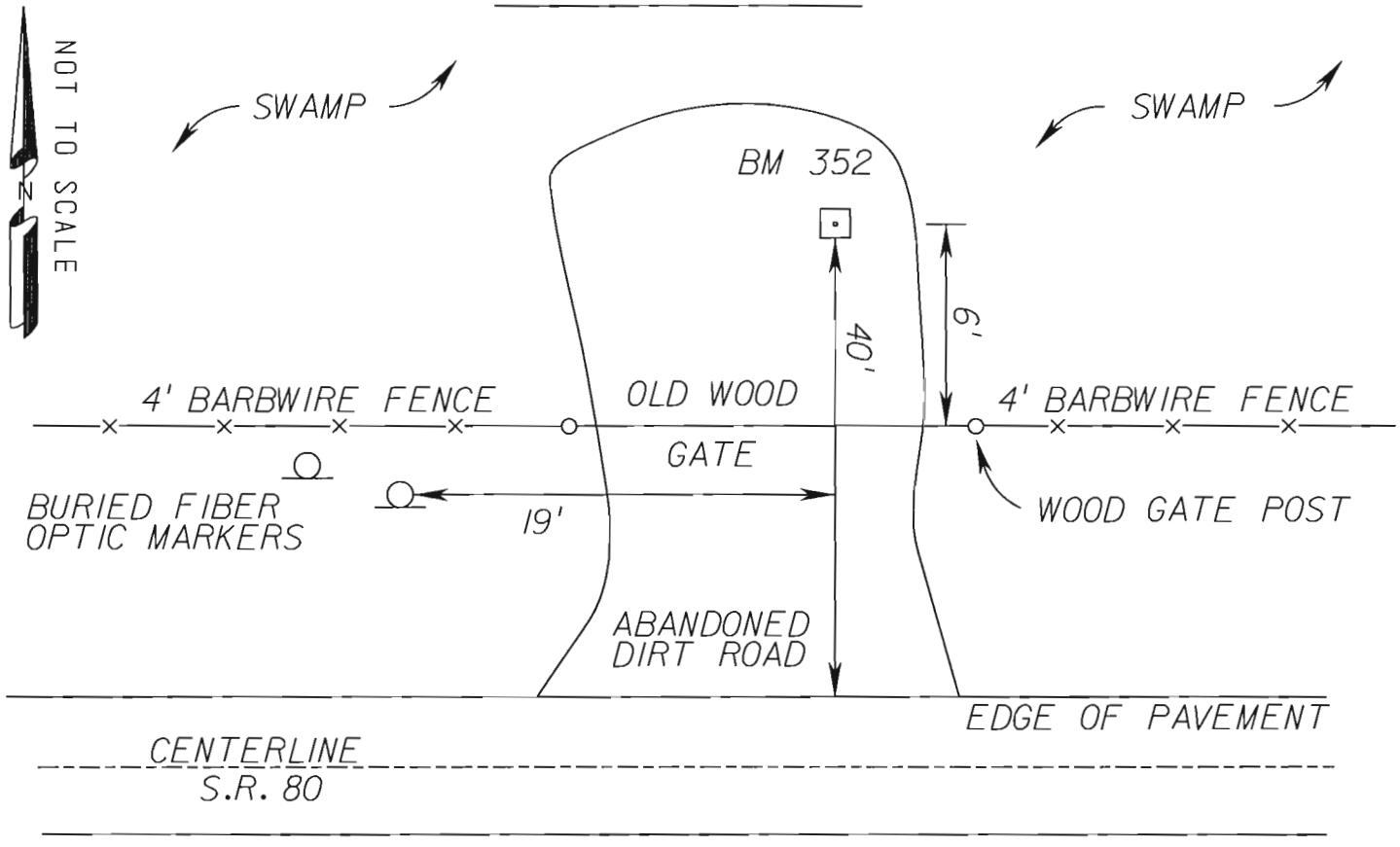

Florida Department of Transportation District One

Vertical Control Data Sheet

DATUM

NGVD 1929 X

NAVD 1988 ___

Monument Name or Designation: BM 353 Elevation feet: 18.164

State Road No.: S.R. 80 County: GLADES

Section: 32 Township: 42S Range: 31E Roadway Section I.D.: 07010-000

Establishing Firm: AIM ENGINEERING Field Book No.: 502130

Established: / / Recovered: 02 / 09 / 11 Financial Project ID: 408286-5

State Plane Coordinates:
(Nearest Foot) N (Y): = 885189 E (X): = 573058

Base Line Station and Offset: STA. 1098+94 128' LT

Description of Monument: FOUND STANDARD 4"X4" F.D.O.T CONCRETE MONUMENT WITH A BRASS DISK STAMPED BM 353

Distance and Direction from Nearest Intersection: 0.5 MILES EAST ALONG S.R. 80 FROM THE INTERSECTION OF LEXINGTON PARKWAY AND STATE ROAD 80

Field Location Sketch

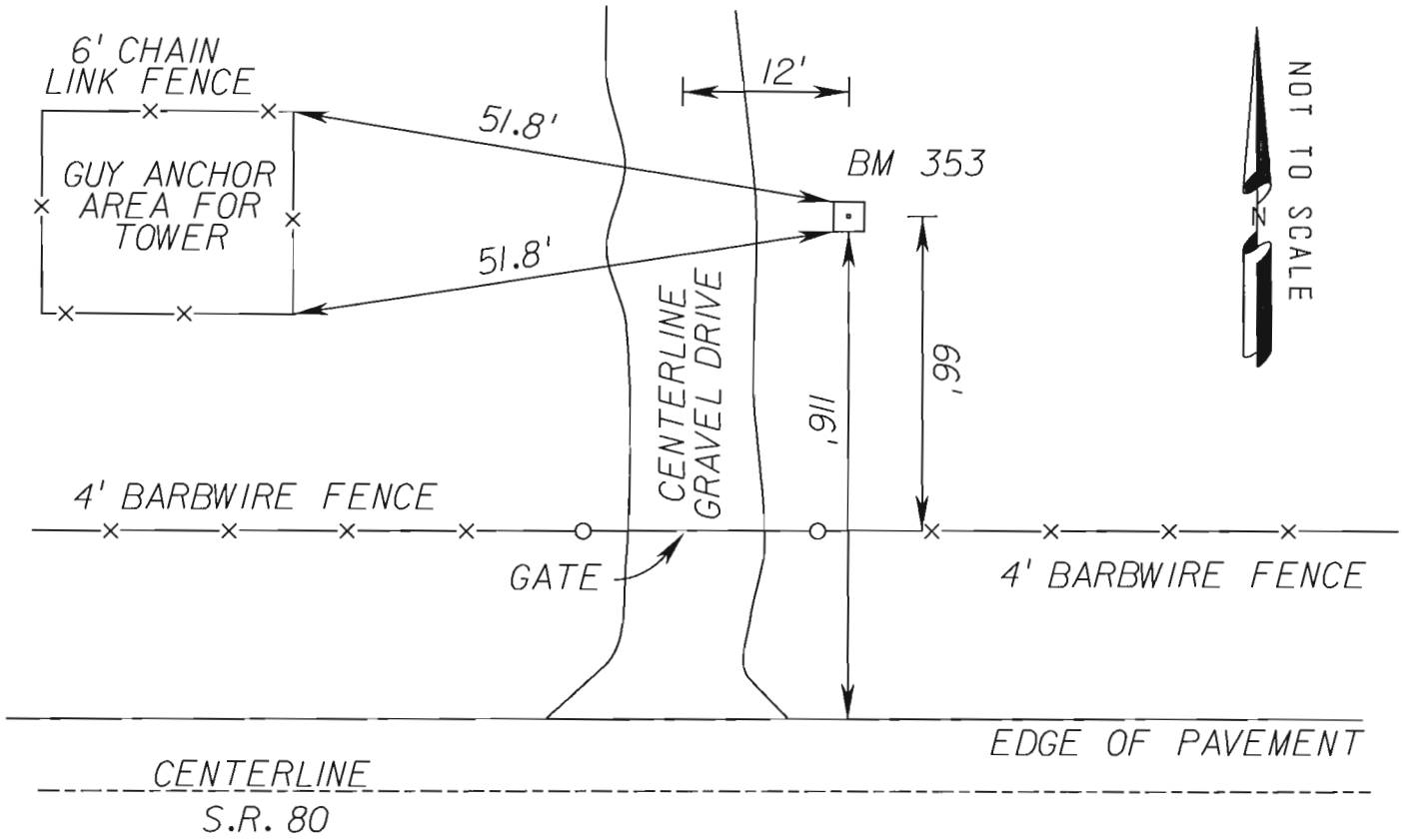

Florida Department of Transportation District One

Vertical Control Data Sheet

DATUM

NGVD 1929 X

NAVD 1988 ___

Monument Name or Designation: BM 354 Elevation feet: 19.486

State Road No.: S.R. 80 County: GLADES

Section: 32 Township: 42S Range: 31E Roadway Section I.D.: 07010-000

Establishing Firm: AIM ENGINEERING Field Book No.: 502130

Established: / / Recovered: 02 / 09 / 11 Financial Project ID: 408286-5

State Plane Coordinates:
(Nearest Foot) N (Y): = 885134 E (X): = 574036

Base Line Station and Offset: STA. 1108+72 76' LT

Description of Monument: FOUND STANDARD 4"X4" F.D.O.T CONCRETE MONUMENT WITH A BRASS DISK STAMPED BM 354

Distance and Direction from Nearest Intersection: 0.6 MILES EAST ALONG S.R. 80 FROM THE INTERSECTION OF LEXINGTON PARKWAY AND STATE ROAD 80

Field Location Sketch

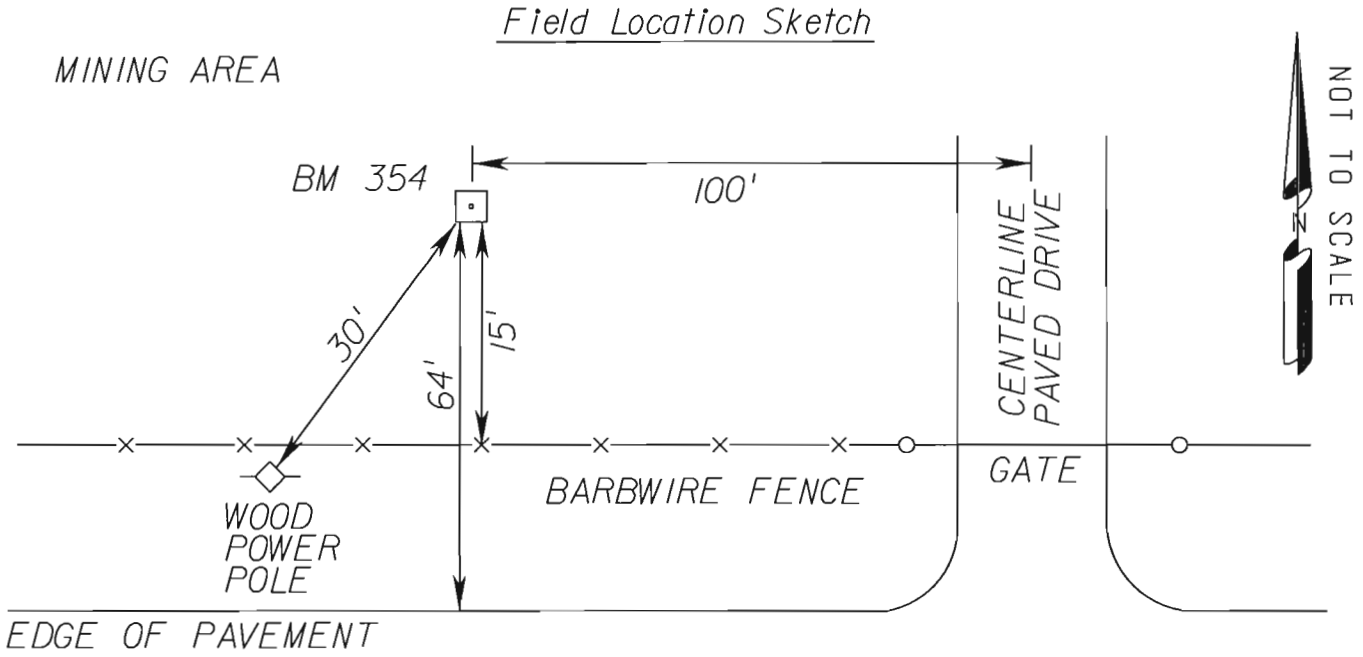

Florida Department of Transportation District One

Vertical Control Data Sheet

DATUM

NGVD 1929 X

NAVD 1988 ___

Monument Name or Designation: BM 355 Elevation feet: 18.862

State Road No.: S.R. 80 County: GLADES

Section: 32 Township: 42S Range: 31E Roadway Section I.D.: 07010-000

Establishing Firm: AIM ENGINEERING Field Book No.: 502130

Established: / / Recovered: 02 / 09 / 11 Financial Project ID: 408286-5

State Plane Coordinates:
(Nearest Foot) N (Y): = 885161 E (X): = 574999

Base Line Station and Offset: STA. 1118+35 106' LT

Description of Monument: FOUND STANDARD 4"X4" F.D.O.T CONCRETE MONUMENT WITH A BRASS DISK STAMPED BM 355

Distance and Direction from Nearest Intersection: 0.8 MILES EAST ALONG S.R. 80 FROM THE INTERSECTION OF LEXINGTON PARKWAY AND STATE ROAD 80

Field Location Sketch

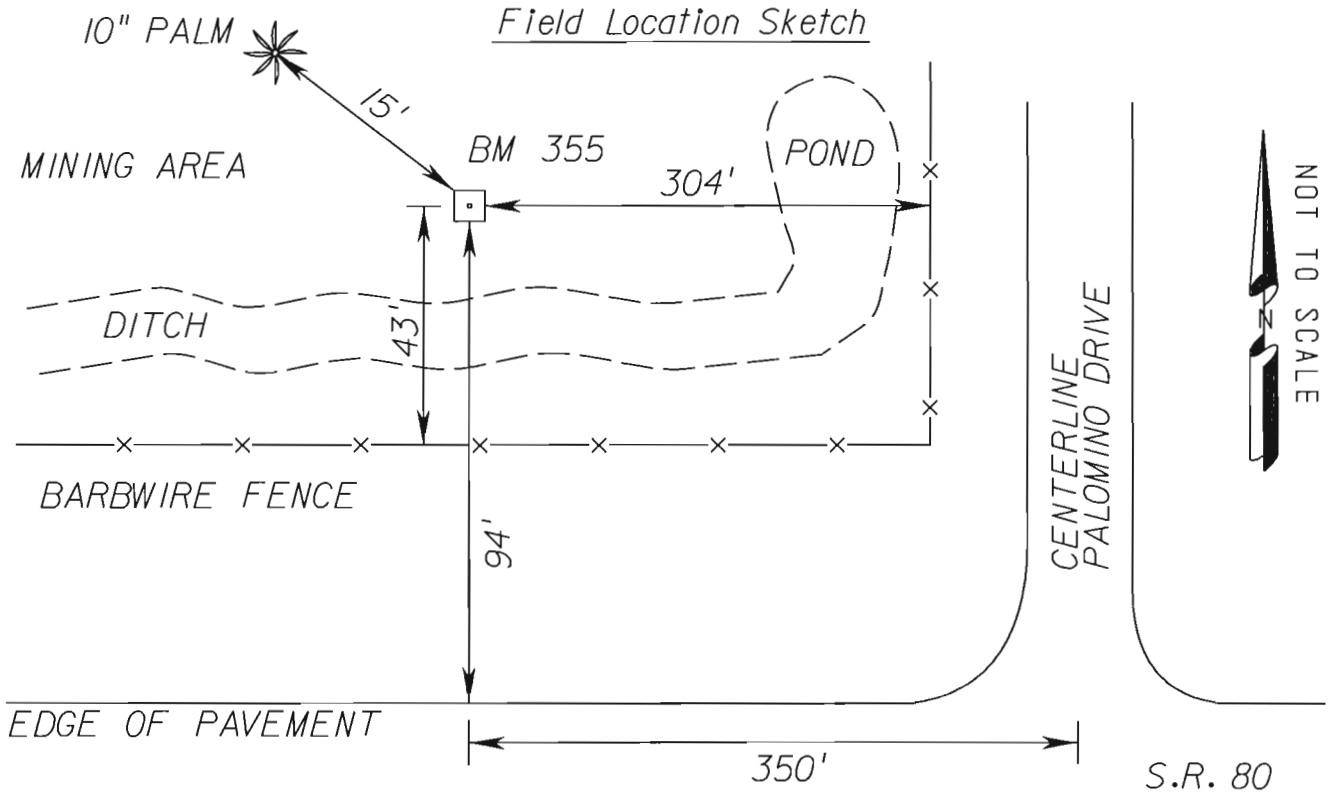

Florida Department of Transportation District One

Vertical Control Data Sheet

DATUM

NGVD 1929 X

NAVD 1988 ___

Monument Name or Designation: B 413 Elevation feet: 19.640

State Road No.: S.R. 80 County: HENDRY

Section: 5 Township: 43S Range: 31E Roadway Section I.D.: 07010-000

Establishing Firm: NATIONAL GEODETIC SURVEY Field Book No.: 502130

Established: / / Recovered: 02 / 09 / 11 Financial Project ID: 408286-5

State Plane Coordinates:
(Nearest Foot) N (Y): = 885017 E (X): = 575437

Base Line Station and Offset: STA. 1122+74 36' RT

Description of Monument: STAINLESS STEEL ROD IN SLEEVE STAMPED B 413 1992

Distance and Direction from Nearest Intersection: 0.9 MILES EAST ALONG S.R. 80 FROM THE INTERSECTION OF LEXINGTON PARKWAY AND STATE ROAD 80

Field Location Sketch

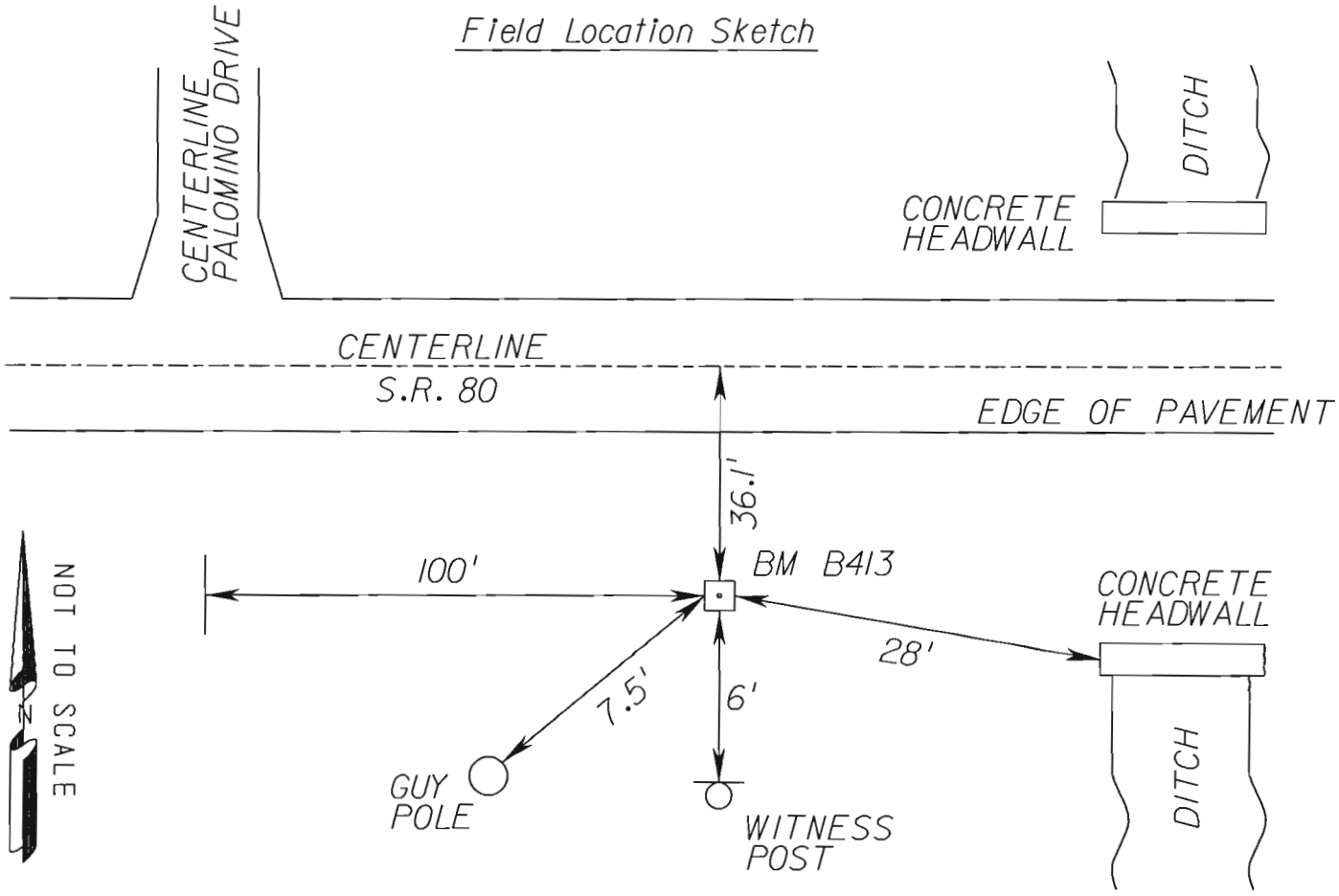

The NGS Data Sheet

See file dsdata.txt for more information about the datasheet.

```
DATABASE =  ,PROGRAM = datasheet, VERSION = 7.85
1         National Geodetic Survey,   Retrieval Date = FEBRUARY  4, 2011
 AD8260 ***********************************************************************
 AD8260  DESIGNATION -  B 413
 AD8260  PID         -  AD8260
 AD8260  STATE/COUNTY-  FL/HENDRY
 AD8260  USGS QUAD   -  LAKE HICPOCHEE (1971)
 AD8260
 AD8260                        *CURRENT SURVEY CONTROL
 AD8260  ______________________________________________________________________
 AD8260* NAD 83(2007)-  26 46 05.78367(N)    081 14 50.71261(W)     ADJUSTED
 AD8260* NAVD 88     -         5.590  (meters)      18.34   (feet)  ADJUSTED
 AD8260  ______________________________________________________________________
 AD8260  EPOCH DATE  -        2002.00
 AD8260  X           -     867,125.627 (meters)                     COMP
 AD8260  Y           -  -5,632,118.987 (meters)                     COMP
 AD8260  Z           -   2,855,306.348 (meters)                     COMP
 AD8260  LAPLACE CORR-          -0.41  (seconds)                    DEFLEC09
 AD8260  ELLIP HEIGHT-         -18.842 (meters)          (02/10/07) ADJUSTED
 AD8260  GEOID HEIGHT-         -24.45  (meters)                     GEOID09
 AD8260  DYNAMIC HT  -           5.581 (meters)      18.31   (feet) COMP
 AD8260
 AD8260  ------- Accuracy Estimates (at 95% Confidence Level in cm) --------
 AD8260  Type    PID    Designation                      North   East  Ellip
 AD8260  ----------------------------------------------------------------
 AD8260  NETWORK AD8260 B 413                              1.98   1.96   3.53
 AD8260  ----------------------------------------------------------------
 AD8260  MODELED GRAV-     979,107.6   (mgal)                      NAVD 88
 AD8260
 AD8260  VERT ORDER  -  FIRST     CLASS II
 AD8260
 AD8260.The horizontal coordinates were established by GPS observations
 AD8260.and adjusted by the National Geodetic Survey in February 2007.
 AD8260
 AD8260.The datum tag of NAD 83(2007) is equivalent to NAD 83(NSRS2007).
 AD8260.See National Readjustment for more information.
 AD8260.The horizontal coordinates are valid at the epoch date displayed above.
 AD8260.The epoch date for horizontal control is a decimal equivalence
 AD8260.of Year/Month/Day.
 AD8260
 AD8260.The orthometric height was determined by differential leveling and
 AD8260.adjusted in September 1992.
 AD8260
 AD8260.The X, Y, and Z were computed from the position and the ellipsoidal ht.
 AD8260
 AD8260.The Laplace correction was computed from DEFLEC09 derived deflections.
 AD8260
 AD8260.The ellipsoidal height was determined by GPS observations
 AD8260.and is referenced to NAD 83.
 AD8260
 AD8260.The geoid height was determined by GEOID09.
 AD8260
```

```
AD8260.The dynamic height is computed by dividing the NAVD 88
AD8260.geopotential number by the normal gravity value computed on the
AD8260.Geodetic Reference System of 1980 (GRS 80) ellipsoid at 45
AD8260.degrees latitude (g = 980.6199 gals.).
AD8260
AD8260.The modeled gravity was interpolated from observed gravity values.
AD8260
AD8260;                    North         East     Units Scale Factor Converg.
AD8260;SPC FL E     -   269,753.771   175,393.604   MT  0.99994865   -0 06 41.2
AD8260;SPC FL E     -   885,017.16    575,437.18   sFT  0.99994865   -0 06 41.2
AD8260;UTM  17      - 2,960,793.714   475,401.999   MT  0.99960747   -0 06 41.2
AD8260
AD8260!             -  Elev Factor  x  Scale Factor =   Combined Factor
AD8260!SPC FL E     -   1.00000296  x   0.99994865  =   0.99995161
AD8260!UTM  17      -   1.00000296  x   0.99960747  =   0.99961043
AD8260
AD8260                          SUPERSEDED SURVEY CONTROL
AD8260
AD8260  NAD 83(1999)-  26 46 05.78394(N)    081 14 50.71300(W) AD(       ) 1
AD8260  ELLIP H (12/12/02)  -18.857  (m)                       GP(       ) 4 1
AD8260  NAVD 88 (12/12/02)    5.59   (m)           18.3    (f) LEVELING    3
AD8260  NGVD 29 (09/01/92)    5.986  (m)           19.64   (f) ADJUSTED    1 2
AD8260
AD8260.Superseded values are not recommended for survey control.
AD8260.NGS no longer adjusts projects to the NAD 27 or NGVD 29 datums.
AD8260.See file dsdata.txt to determine how the superseded data were derived.
AD8260
AD8260_U.S. NATIONAL GRID SPATIAL ADDRESS: 17RMK7540160793(NAD 83)
AD8260_MARKER: F = FLANGE-ENCASED ROD
AD8260_SETTING: 59 = STAINLESS STEEL ROD IN SLEEVE (10 FT.+)
AD8260_SP_SET: STAINLESS STEEL ROD IN SLEEVE
AD8260_STAMPING: B 413 1992
AD8260_MARK LOGO: NGS
AD8260_PROJECTION: FLUSH
AD8260_MAGNETIC: I = MARKER IS A STEEL ROD
AD8260_STABILITY: B = PROBABLY HOLD POSITION/ELEVATION WELL
AD8260_SATELLITE: THE SITE LOCATION WAS REPORTED AS SUITABLE FOR
AD8260+SATELLITE: SATELLITE OBSERVATIONS - May 18, 2002
AD8260_ROD/PIPE-DEPTH: 24.1 meters
AD8260_SLEEVE-DEPTH  : 0.9 meters
AD8260
AD8260  HISTORY     - Date     Condition        Report By
AD8260  HISTORY     - 1992     MONUMENTED       NGS
AD8260  HISTORY     - 20020518 GOOD             MAPTEC
AD8260
AD8260                          STATION DESCRIPTION
AD8260
AD8260'DESCRIBED BY NATIONAL GEODETIC SURVEY 1992
AD8260'19.1 KM (11.85 MI) EASTERLY ALONG STATE HIGHWAY 80 FROM THE COUNTY
AD8260'COURTHOUSE IN LA BELLE, 29.4 M (96.5 FT) EAST OF THE EXTENDED
AD8260'CENTERLINE OF A ROAD LEADING TO HORSESHOE ACRES, 11.0 M (36.1 FT)
AD8260'SOUTH OF THE CENTERLINE OF THE HIGHWAY, 8.4 M (27.6 FT) WEST OF THE
AD8260'WEST END OF THE SOUTH HEADWALL OF A TRIPLE CULVERT, 2.3 M (7.5 FT)
AD8260'NORTHEAST OF A UTILITY POLE, 2.0 M (6.6 FT) NORTH OF A WITNESS POST,
AD8260'AND 0.9 M (3.0 FT) BELOW THE LEVEL OF THE HIGHWAY.  NOTE--ACCESS TO
AD8260'THE DATUM POINT IS THROUGH A 5-INCH LOGO CAP.
AD8260
AD8260                          STATION RECOVERY (2002)
AD8260
AD8260'RECOVERY NOTE BY MAPTECH INCORPORATED 2002 (CDP)
AD8260'RECOVERED AS DESCRIBED.
AD8260'
```

Florida Department of Transportation District One

Vertical Control Data Sheet

DATUM

NGVD 1929 X

NAVD 1988 ___

Monument Name or Designation: BM 1 Elevation feet: 19.100

State Road No.: S.R. 80 County: GLADES

Section: 32 Township: 42S Range: 31E Roadway Section I.D.: 07010-000

Establishing Firm: F.D.O.T. Field Book No.: 502130

Established: / / Recovered: 02 / 09 / 11 Financial Project ID: 408286-5

State Plane Coordinates:
(Nearest Foot) N (Y): = 885109 E (X): = 575584

Base Line Station and Offset: STA. 1124+21 56' LT

Description of Monument: FOUND STANDARD 4"X4" F.D.O.T CONCRETE MONUMENT WITH A BRASS DISK STAMPED BM 1

Distance and Direction from Nearest Intersection: 0.9 MILES EAST ALONG S.R. 80 FROM THE INTERSECTION OF LEXINGTON PARKWAY AND STATE ROAD 80

Field Location Sketch

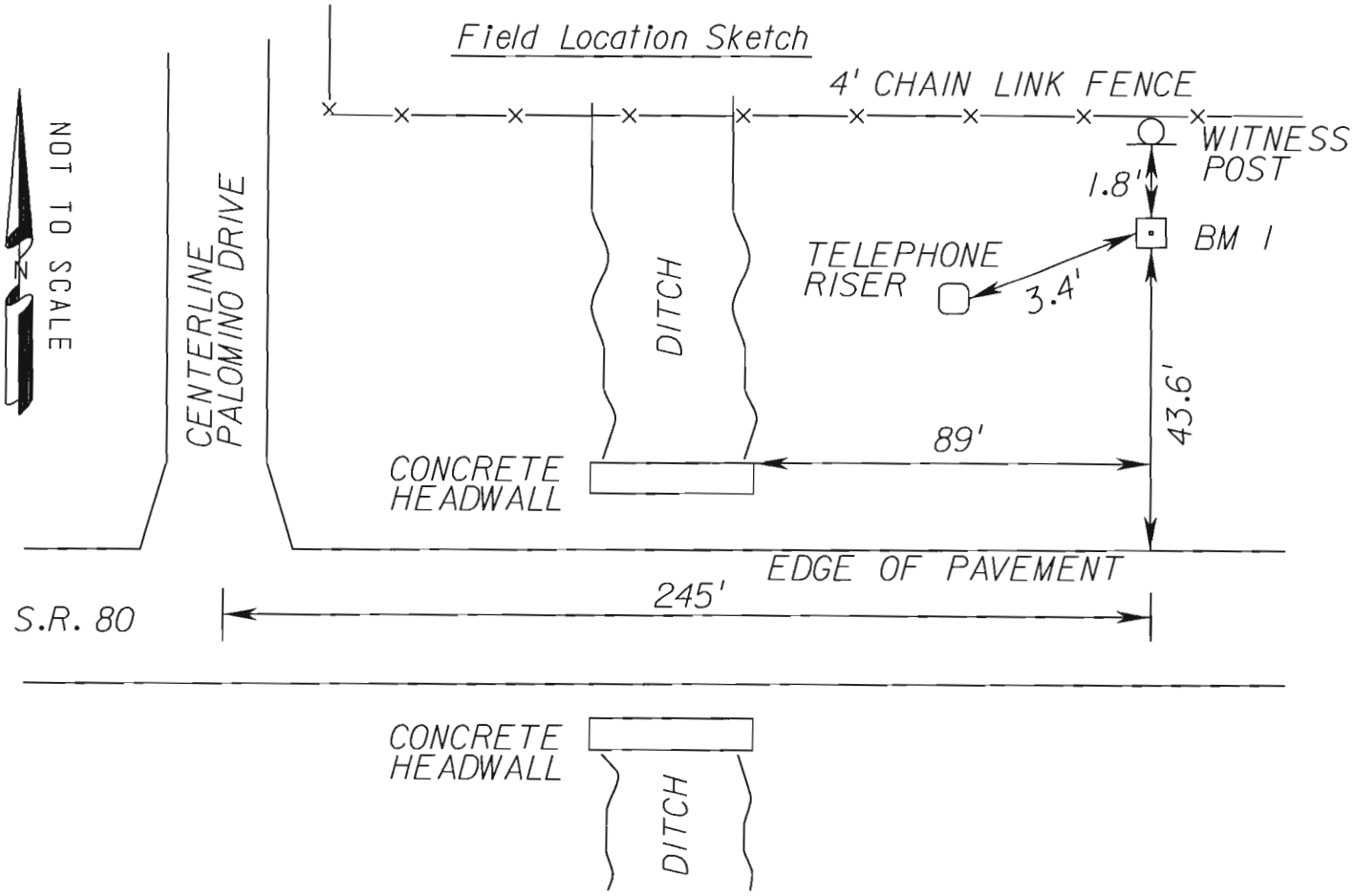

Florida Department of Transportation District One

Vertical Control Data Sheet

DATUM

NGVD 1929 X

NAVD 1988 ___

Monument Name or Designation: BM 356 Elevation feet: 21.466

State Road No.: S.R. 80 County: HENDRY

Section: 5 Township: 43S Range: 31E Roadway Section I.D.: 07010-000

Establishing Firm: AIM ENGINEERING Field Book No.: 502130

Established: / / Recovered: 02 / 09 / 11 Financial Project ID: 408286-5

State Plane Coordinates:
(Nearest Foot) N (Y): = 884938 E (X): = 575986

Base Line Station and Offset: STA. 1128+23 113' RT

Description of Monument: FOUND STANDARD 4"X4" F.D.O.T CONCRETE MONUMENT WITH A BRASS DISK STAMPED BM 356

Distance and Direction from Nearest Intersection: 1.0 MILES EAST ALONG S.R. 80 FROM THE INTERSECTION OF LEXINGTON PARKWAY AND STATE ROAD 80

Field Location Sketch

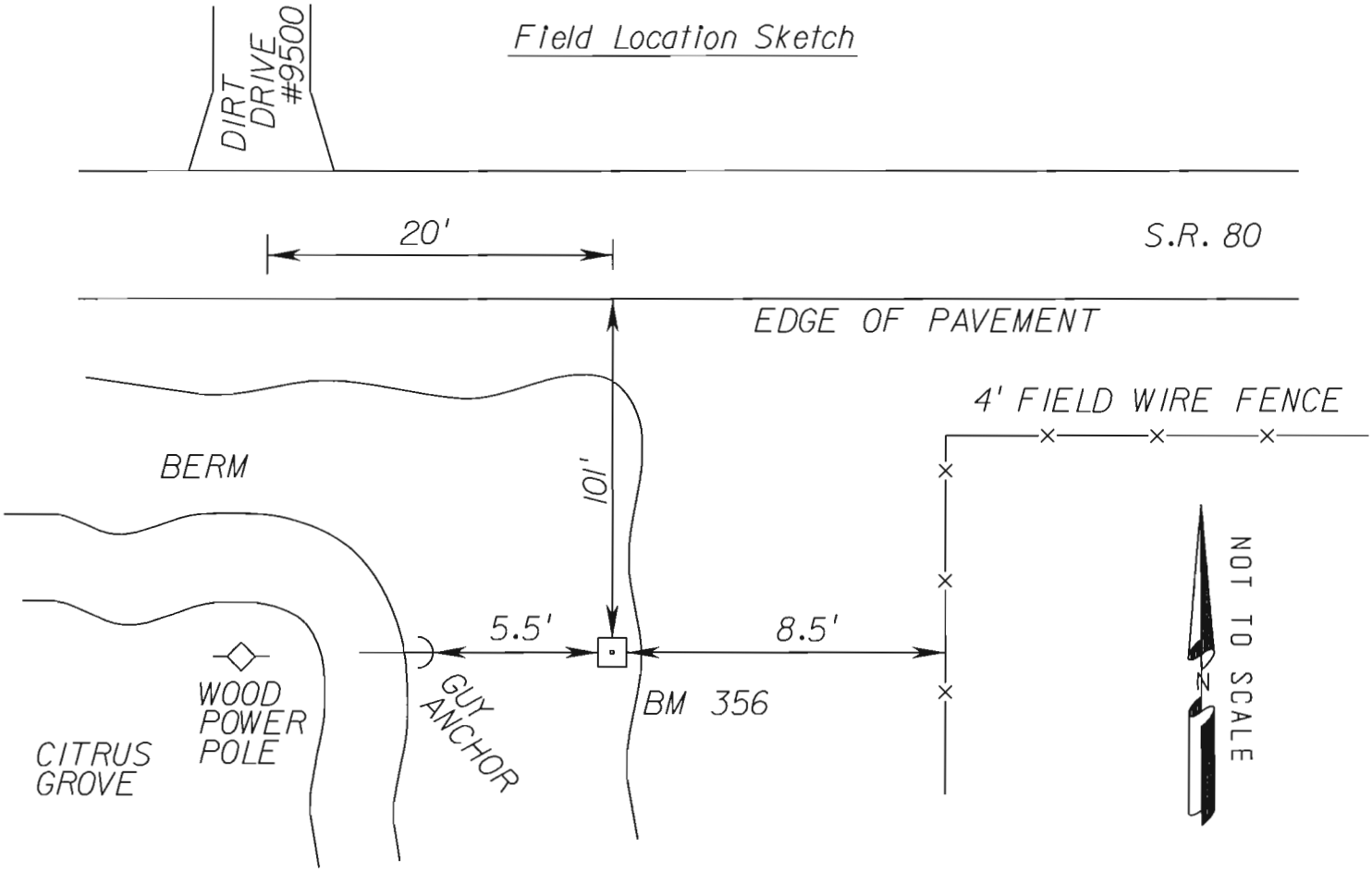

Florida Department of Transportation District One

Vertical Control Data Sheet

DATUM

NGVD 1929 X

NAVD 1988 ___

Monument Name or Designation: BM 357 Elevation feet: 19.953

State Road No.: S.R. 80 County: HENDRY

Section: 4 Township: 43S Range: 31E Roadway Section I.D.: 07010-000

Establishing Firm: AIM ENGINEERING Field Book No.: 502130

Established: / / Recovered: 02 / 09 / 11 Financial Project ID: 408286-5

State Plane Coordinates:
(Nearest Foot) N (Y): = 884870 E (X): = 576978

Base Line Station and Offset: STA. 1138+15 178' RT

Description of Monument: FOUND STANDARD 4"X4" F.D.O.T CONCRETE MONUMENT WITH A BRASS DISK STAMPED BM 357

Distance and Direction from Nearest Intersection: 1.2 MILES EAST ALONG S.R. 80 FROM THE INTERSECTION OF LEXINGTON PARKWAY AND STATE ROAD 80

Field Location Sketch

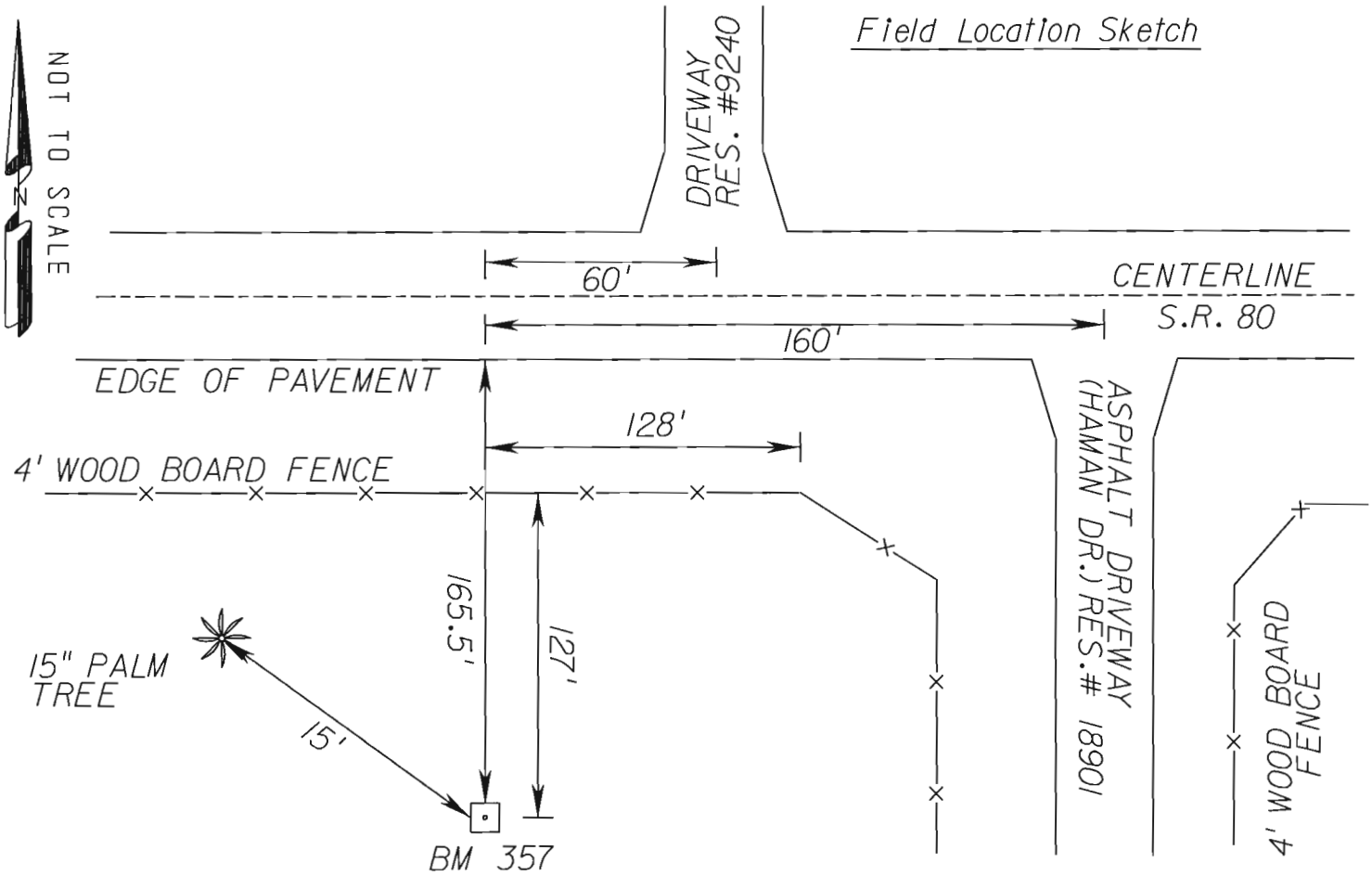

Florida Department of Transportation District One

Vertical Control Data Sheet

DATUM

NGVD 1929 X

NAVD 1988 ___

Monument Name or Designation: BM 358 Elevation feet: 20.325

State Road No.: S.R. 80 County: GLADES

Section: 32 Township: 42S Range: 31E Roadway Section I.D.: 07010-000

Establishing Firm: AIM ENGINEERING Field Book No.: 502130

Established: / / Recovered: 02 / 09 / 11 Financial Project ID: 408286-5

State Plane Coordinates:
(Nearest Foot) N (Y): = 885203 E (X): = 577961

Base Line Station and Offset: STA. 1147+98 158' LT

Description of Monument: FOUND STANDARD 4"X4" F.D.O.T CONCRETE MONUMENT WITH A BRASS DISK STAMPED BM 358

Distance and Direction from Nearest Intersection: 1.4 MILES EAST ALONG S.R. 80 FROM THE INTERSECTION OF LEXINGTON PARKWAY AND STATE ROAD 80

Field Location Sketch

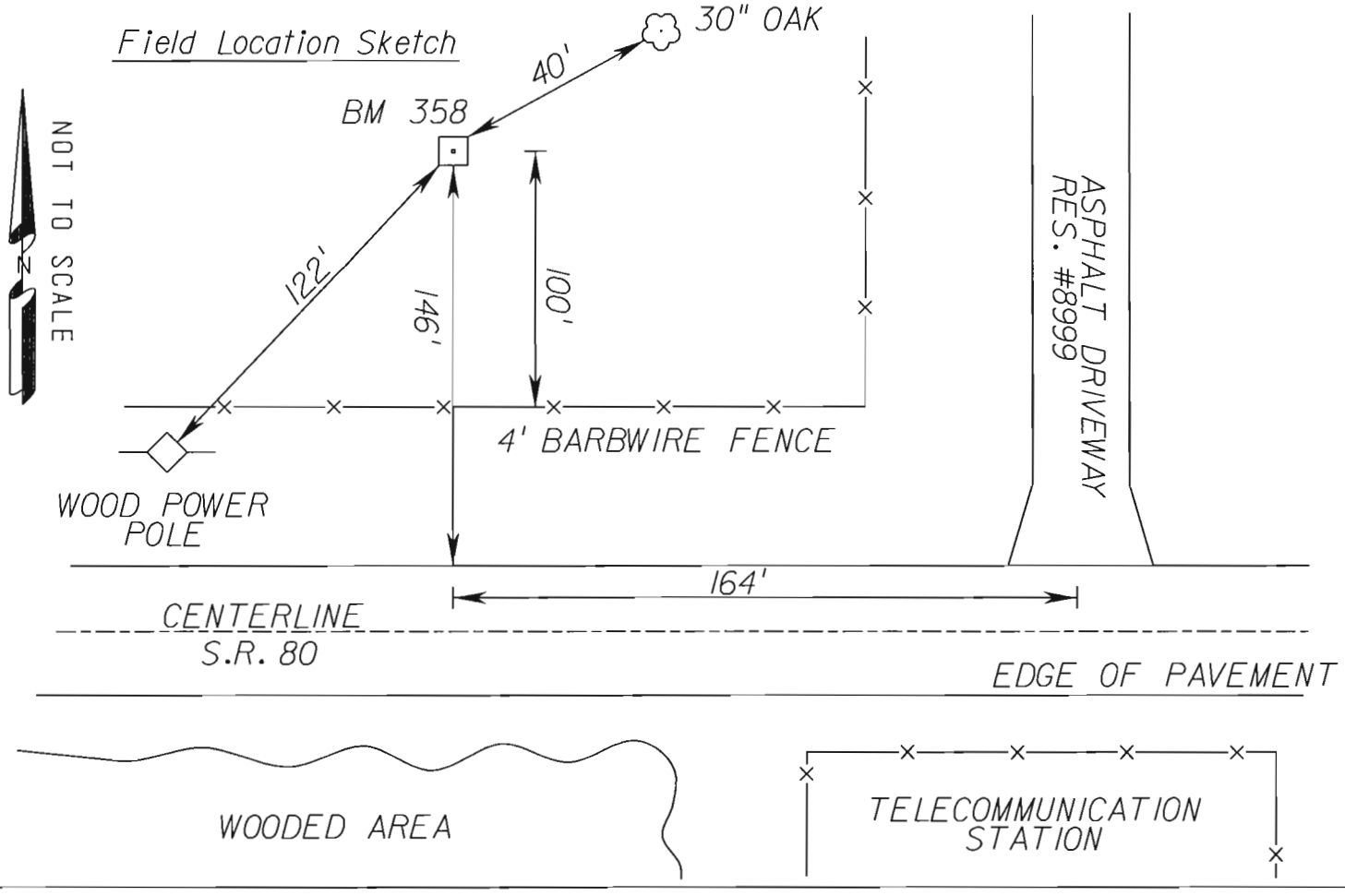

Florida Department of Transportation District One

Vertical Control Data Sheet

DATUM

NGVD 1929 X

NAVD 1988 ___

Monument Name or Designation: BM 359 Elevation feet: 20.056

State Road No.: S.R. 80 County: GLADES

Section: 33 Township: 42S Range: 31E Roadway Section I.D.: 07010-000

Establishing Firm: AIM ENGINEERING Field Book No.: 502130

Established: / / Recovered: 02 / 09 / 11 Financial Project ID: 408286-5

State Plane Coordinates:
(Nearest Foot) N (Y): = 885213 E (X): = 578975

Base Line Station and Offset: STA. 1158+11 171' LT

Description of Monument: FOUND STANDARD 4"X4" F.D.O.T CONCRETE MONUMENT WITH A BRASS DISK STAMPED BM 359

Distance and Direction from Nearest Intersection: 1.6 MILES EAST ALONG S.R. 80 FROM THE INTERSECTION OF LEXINGTON PARKWAY AND STATE ROAD 80

Field Location Sketch

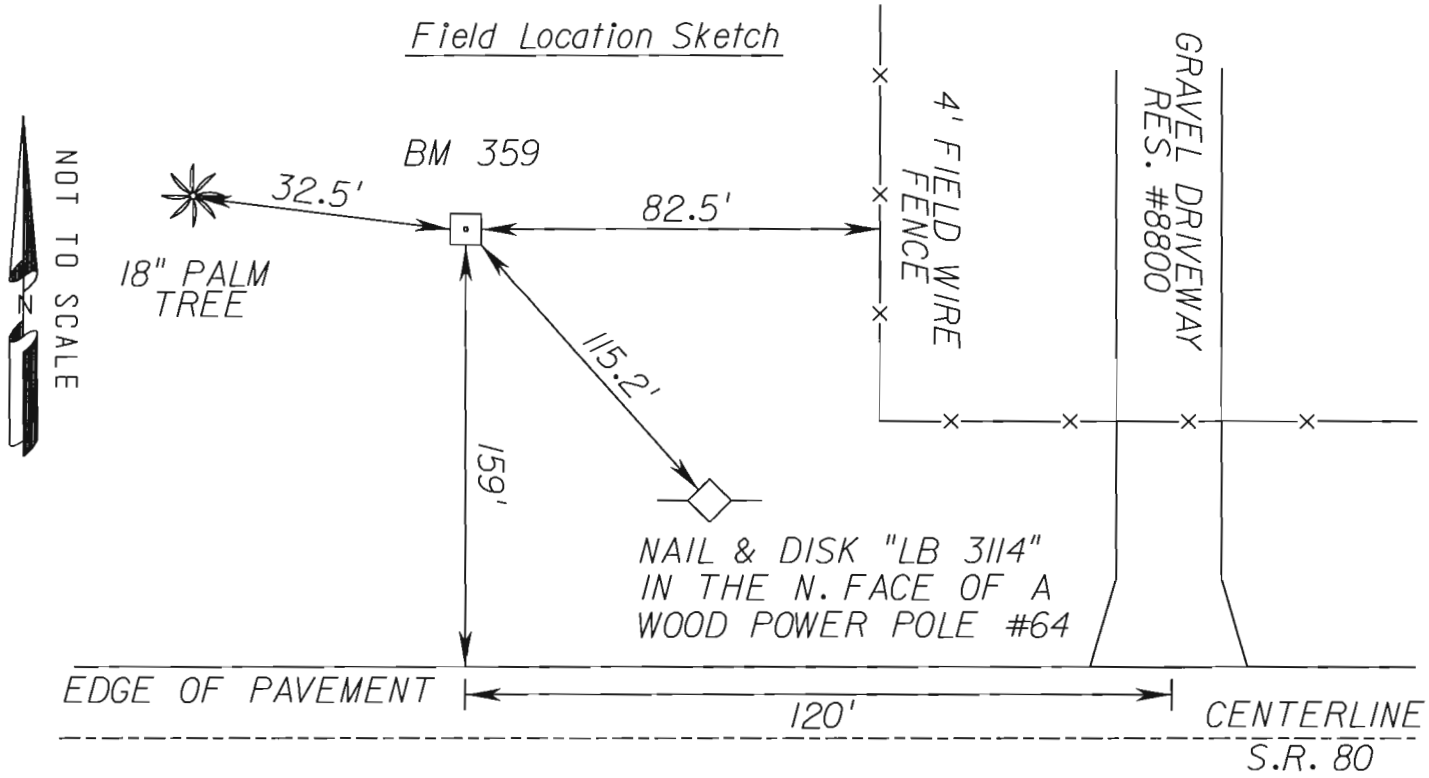

Florida Department of Transportation District One

Vertical Control Data Sheet

DATUM

NGVD 1929 X

NAVD 1988 ___

Monument Name or Designation: BM 360 Elevation feet: 19.308

State Road No.: S.R. 80 County: GLADES

Section: 33 Township: 42S Range: 31E Roadway Section I.D.: 07010-000

Establishing Firm: AIM ENGINEERING Field Book No.: 502130

Established: / / Recovered: 02 / 09 / 11 Financial Project ID: 408286-5

State Plane Coordinates:
(Nearest Foot) N (Y): = 885199 E (X): = 579991

Base Line Station and Offset: STA. 1168+27 160' LT

Description of Monument: FOUND STANDARD 4"X4" F.D.O.T CONCRETE MONUMENT WITH A BRASS DISK STAMPED BM 360

Distance and Direction from Nearest Intersection: 1.8 MILES EAST ALONG S.R. 80 FROM THE INTERSECTION OF LEXINGTON PARKWAY AND STATE ROAD 80

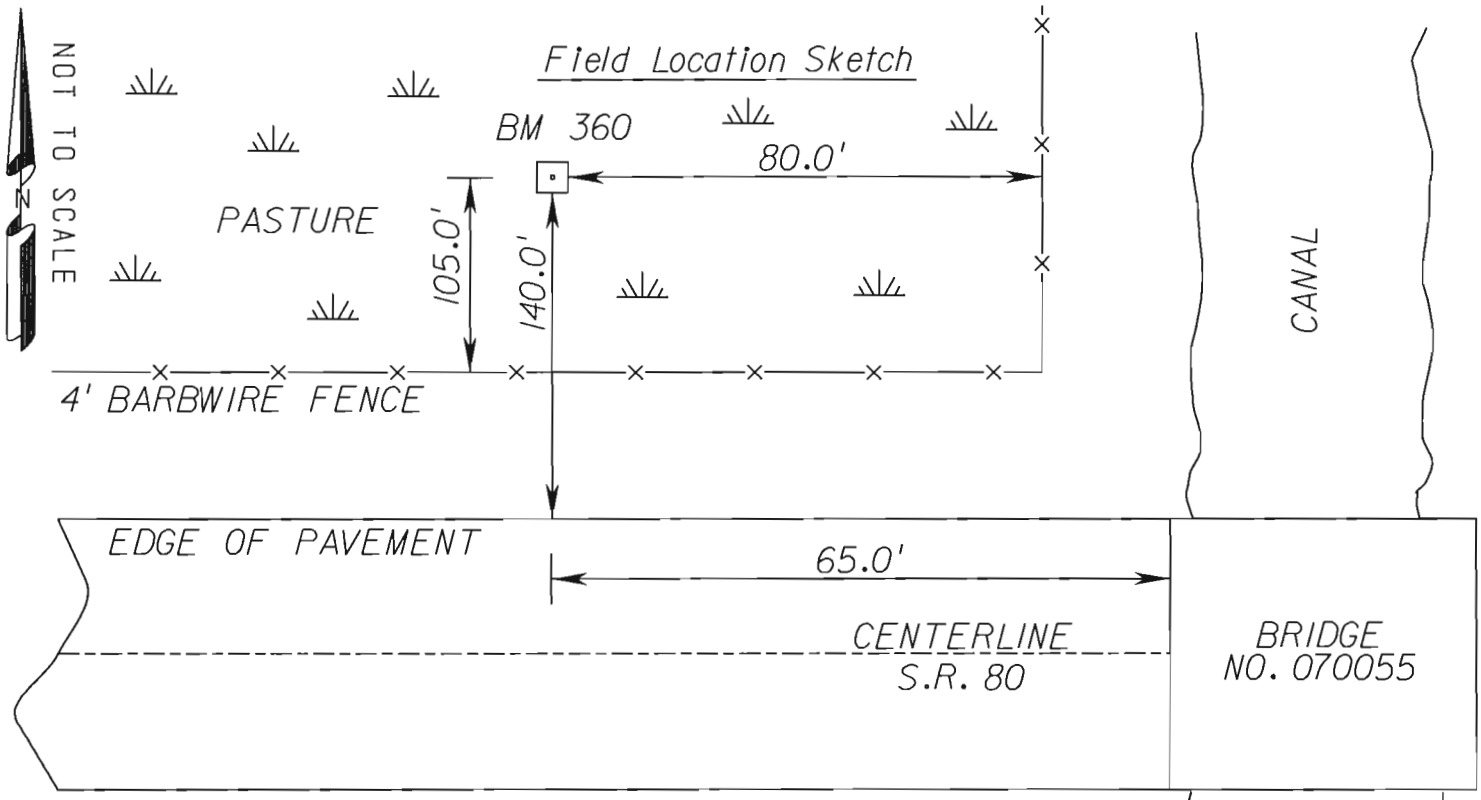

Florida Department of Transportation District One

Vertical Control Data Sheet

DATUM

NGVD 1929 X

NAVD 1988 ___

Monument Name or Designation: HEN 47 Elevation feet: 21.850

State Road No.: S.R. 80 County: GLADES

Section: 33 Township: 42S Range: 31E Roadway Section I.D.: 07010-000

Establishing Firm: S.F.W.M.D. Field Book No.: 502130

Established: / / Recovered: 02 / 09 / 11 Financial Project ID: 408286-5

State Plane Coordinates:
(Nearest Foot) N (Y): = 885063 E (X): = 580133

Base Line Station and Offset: STA. 1169+70 24' LT

Description of Monument: SOUTH FLORIDA WATER MANAGMENT DISTRICT DISC FOUND IN TOP OF A CONCRETE BRIDGE SUPPORT STAMPED HEN 47

Distance and Direction from Nearest Intersection: 1.8 MILES EAST ALONG S.R. 80 FROM THE INTERSECTION OF LEXINGTON PARKWAY AND STATE ROAD 80

Field Location Sketch

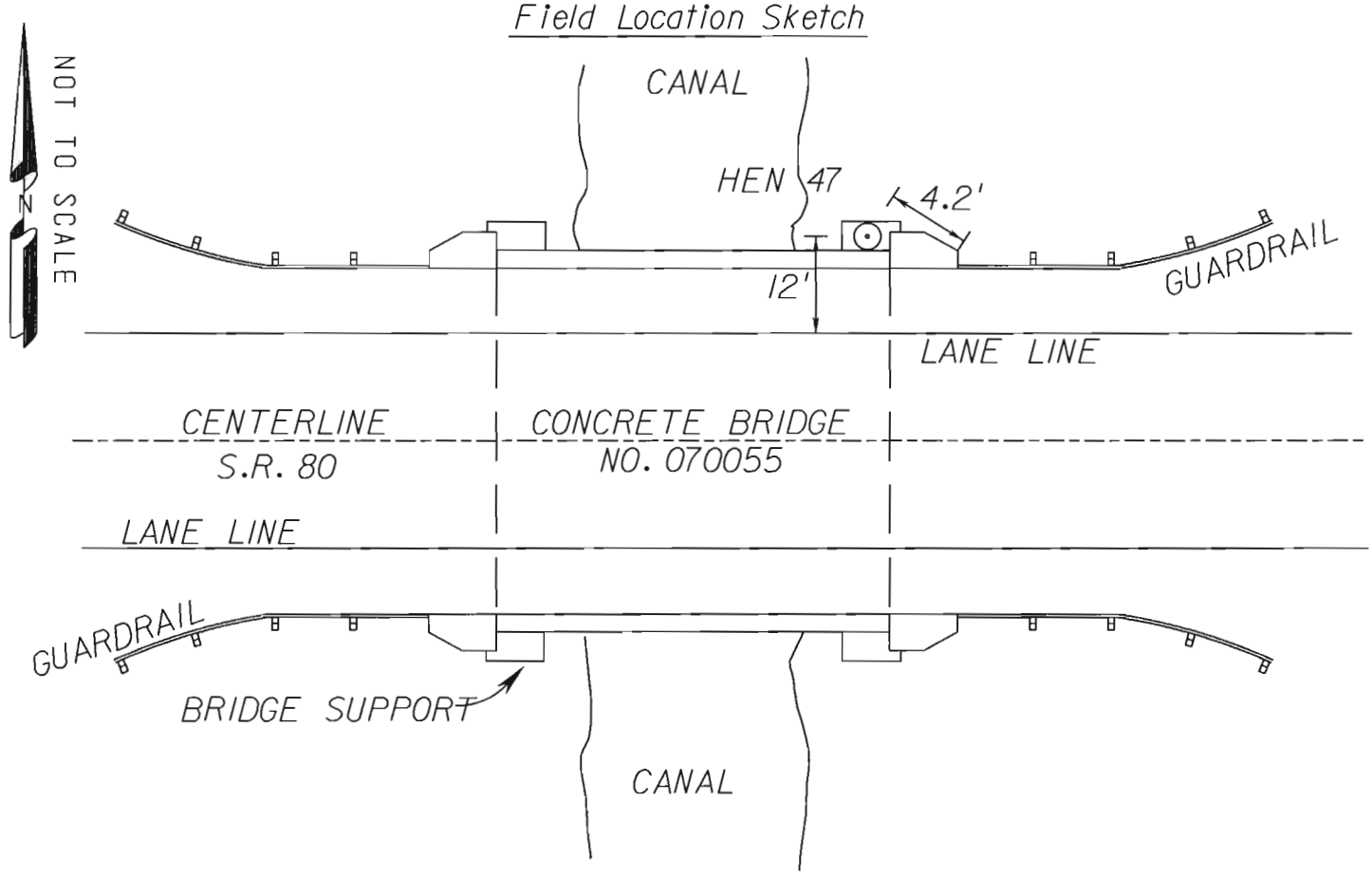

The NGS Data Sheet

See file dsdata.txt for more information about the datasheet.

```
DATABASE =  ,PROGRAM = datasheet, VERSION = 7.85
1         National Geodetic Survey,   Retrieval Date = FEBRUARY  4, 2011
 AD8259 ***********************************************************************
 AD8259  DESIGNATION -  HEN 47
 AD8259  PID         -  AD8259
 AD8259  STATE/COUNTY-  FL/GLADES
 AD8259  USGS QUAD   -  LAKE HICPOCHEE (1971)
 AD8259
 AD8259                        *CURRENT SURVEY CONTROL
 AD8259  ___________________________________________________________________
 AD8259* NAD 83(1986)-  26 46 06.     (N)    081 13 59.     (W)     SCALED
 AD8259* NAVD 88     -         6.263  (meters)      20.55   (feet)  ADJUSTED
 AD8259  ___________________________________________________________________
 AD8259  GEOID HEIGHT-        -24.46  (meters)                       GEOID09
 AD8259  DYNAMIC HT  -          6.253 (meters)      20.52   (feet)  COMP
 AD8259  MODELED GRAV-     979,108.5  (mgal)                         NAVD 88
 AD8259
 AD8259  VERT ORDER  -  FIRST     CLASS II
 AD8259
 AD8259.The horizontal coordinates were scaled from a topographic map and have
 AD8259.an estimated accuracy of +/- 6 seconds.
 AD8259
 AD8259.The orthometric height was determined by differential leveling and
 AD8259.adjusted in September 1992.
 AD8259
 AD8259.The geoid height was determined by GEOID09.
 AD8259
 AD8259.The dynamic height is computed by dividing the NAVD 88
 AD8259.geopotential number by the normal gravity value computed on the
 AD8259.Geodetic Reference System of 1980 (GRS 80) ellipsoid at 45
 AD8259.degrees latitude (g = 980.6199 gals.).
 AD8259
 AD8259.The modeled gravity was interpolated from observed gravity values.
 AD8259
 AD8259;                    North         East    Units  Estimated Accuracy
 AD8259;SPC FL E     -   269,760.      176,820.      MT  (+/- 180 meters Scaled)
 AD8259
 AD8259                         SUPERSEDED SURVEY CONTROL
 AD8259
 AD8259  NGVD 29 (09/01/92)    6.659  (m)           21.85   (f) ADJUSTED    1 2
 AD8259
 AD8259.Superseded values are not recommended for survey control.
 AD8259.NGS no longer adjusts projects to the NAD 27 or NGVD 29 datums.
 AD8259.See file dsdata.txt to determine how the superseded data were derived.
 AD8259
 AD8259_U.S. NATIONAL GRID SPATIAL ADDRESS: 17RMK768607(NAD 83)
 AD8259_MARKER: DD = SURVEY DISK
 AD8259_SETTING: 38 = SET IN THE ABUTMENT OR PIER OF A LARGE BRIDGE
 AD8259_SP_SET: ABUTMENT
 AD8259_STAMPING: HEN-47 1983 BM
 AD8259_MARK LOGO: SFLWMD
 AD8259_MAGNETIC: N = NO MAGNETIC MATERIAL
```

```
AD8259_STABILITY: B = PROBABLY HOLD POSITION/ELEVATION WELL
AD8259_SATELLITE: THE SITE LOCATION WAS REPORTED AS SUITABLE FOR
AD8259+SATELLITE: SATELLITE OBSERVATIONS - February 20, 2003
AD8259
AD8259  HISTORY     - Date     Condition        Report By
AD8259  HISTORY     - 1983     MONUMENTED       SFLWMD
AD8259  HISTORY     - 19920401 GOOD             NGS
AD8259  HISTORY     - 20030220 GOOD             PICKET
AD8259
AD8259                          STATION DESCRIPTION
AD8259
AD8259'DESCRIBED BY NATIONAL GEODETIC SURVEY 1992
AD8259'20.5 KM (12.75 MI) EASTERLY ALONG STATE HIGHWAY 80 FROM THE COUNTY
AD8259'COURTHOUSE IN LA BELLE, IN TOP OF AND 0.1 M (0.3 FT) SOUTH OF THE
AD8259'NORTH END OF THE EAST CONCRETE ABUTMENT OF BRIDGE NUMBER 070055
AD8259'SPANNING A CANAL, 7.1 M (23.3 FT) NORTH OF THE CENTERLINE OF THE
AD8259'HIGHWAY, 0.5 M (1.6 FT) WEST OF THE NORTHWEST CORNER OF A GUARDRAIL,
AD8259'AND 0.3 M (1.0 FT) BELOW THE LEVEL OF THE HIGHWAY.
AD8259
AD8259                          STATION RECOVERY (2003)
AD8259
AD8259'RECOVERY NOTE BY PICKETT AND ASSOCIATES 2003 (KR)
AD8259'RECOVERED IN GOOD CONDITION.

*** retrieval complete.
Elapsed Time = 00:00:00
```

Florida Department of Transportation District One

Vertical Control Data Sheet

DATUM

NGVD 1929 X

NAVD 1988 ___

Monument Name or Designation: BM 361 RESET Elevation feet: 19.396

State Road No.: S.R. 80 County: HENDRY

Section: 4 Township: 43S Range: 31E Roadway Section I.D.: 07010-000

Establishing Firm: HYATT SURVEY SERVICES, INC. Field Book No.: 502130

Established: 02 / 09 / 11 Recovered: / / Financial Project ID: 408286-5

State Plane Coordinates:
(Nearest Foot) N (Y): = 884850 E (X): = 580821

Base Line Station and Offset: STA. 1176+59 187' RT

Description of Monument: SET STANDARD 4"X4" F.D.O.T CONCRETE MONUMENT WITH A BRASS DISK STAMPED BM 361 RESET

Distance and Direction from Nearest Intersection: 1.9 MILES EAST ALONG S.R. 80 FROM THE INTERSECTION OF LEXINGTON PARKWAY AND STATE ROAD 80

Field Location Sketch

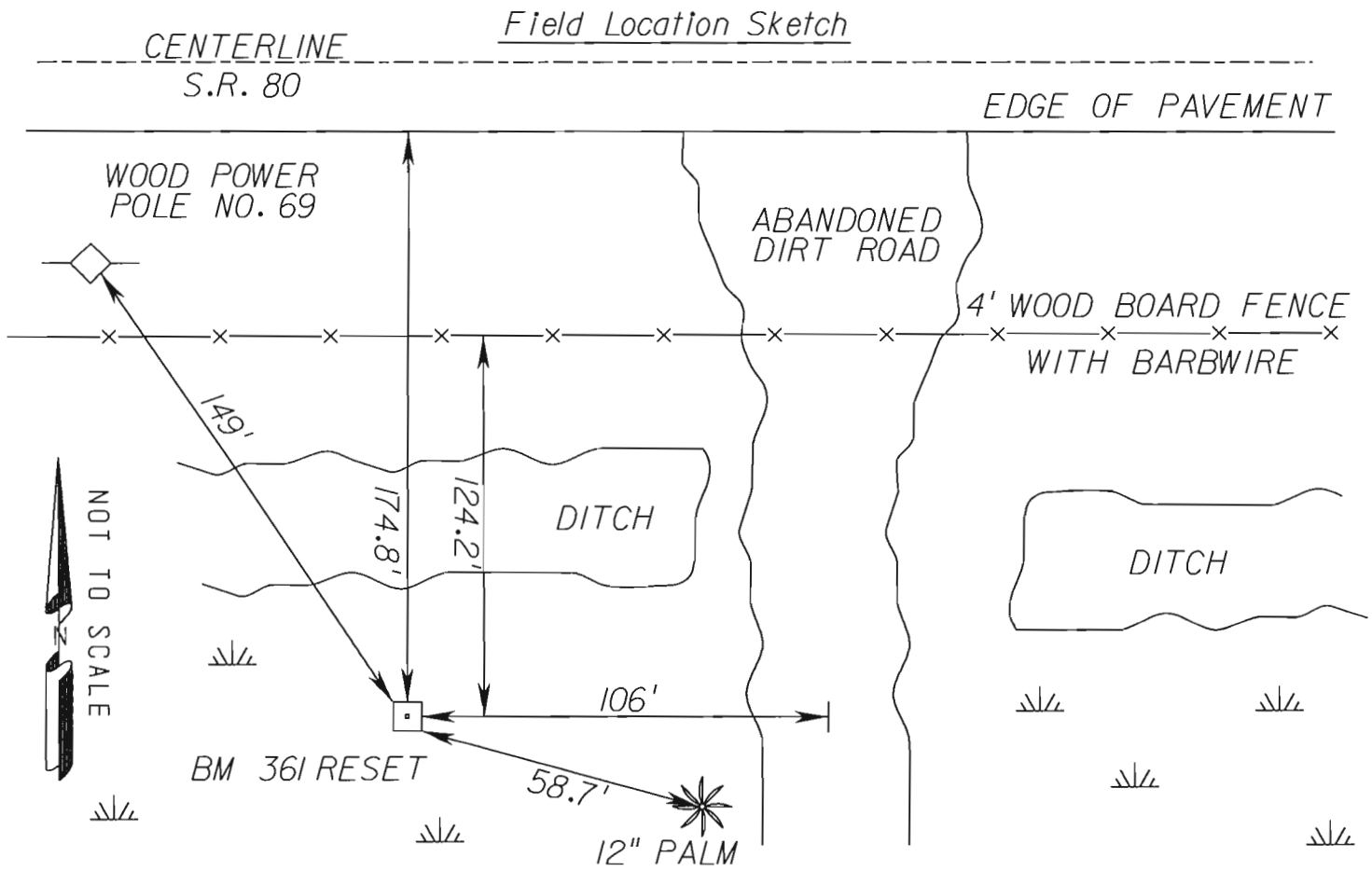

Florida Department of Transportation District One

Vertical Control Data Sheet

DATUM

NGVD 1929 X

NAVD 1988 ___

Monument Name or Designation: BM 362 Elevation feet: 20.743

State Road No.: S.R. 80 County: GLADES

Section: 33 Township: 42S Range: 31E Roadway Section I.D.: 07010-000

Establishing Firm: AIM ENGINEERING Field Book No.: 502130

Established: / / Recovered: 02 / 09 / 11 Financial Project ID: 408286-5

State Plane Coordinates:
(Nearest Foot) N (Y): = 885233 E (X): = 581920

Base Line Station and Offset: STA. 1187+56 200' LT

Description of Monument: FOUND STANDARD 4"X4" F.D.O.T CONCRETE MONUMENT WITH A BRASS DISK STAMPED BM 362

Distance and Direction from Nearest Intersection: 2.2 MILES EAST ALONG S.R. 80 FROM THE INTERSECTION OF LEXINGTON PARKWAY AND STATE ROAD 80

Field Location Sketch

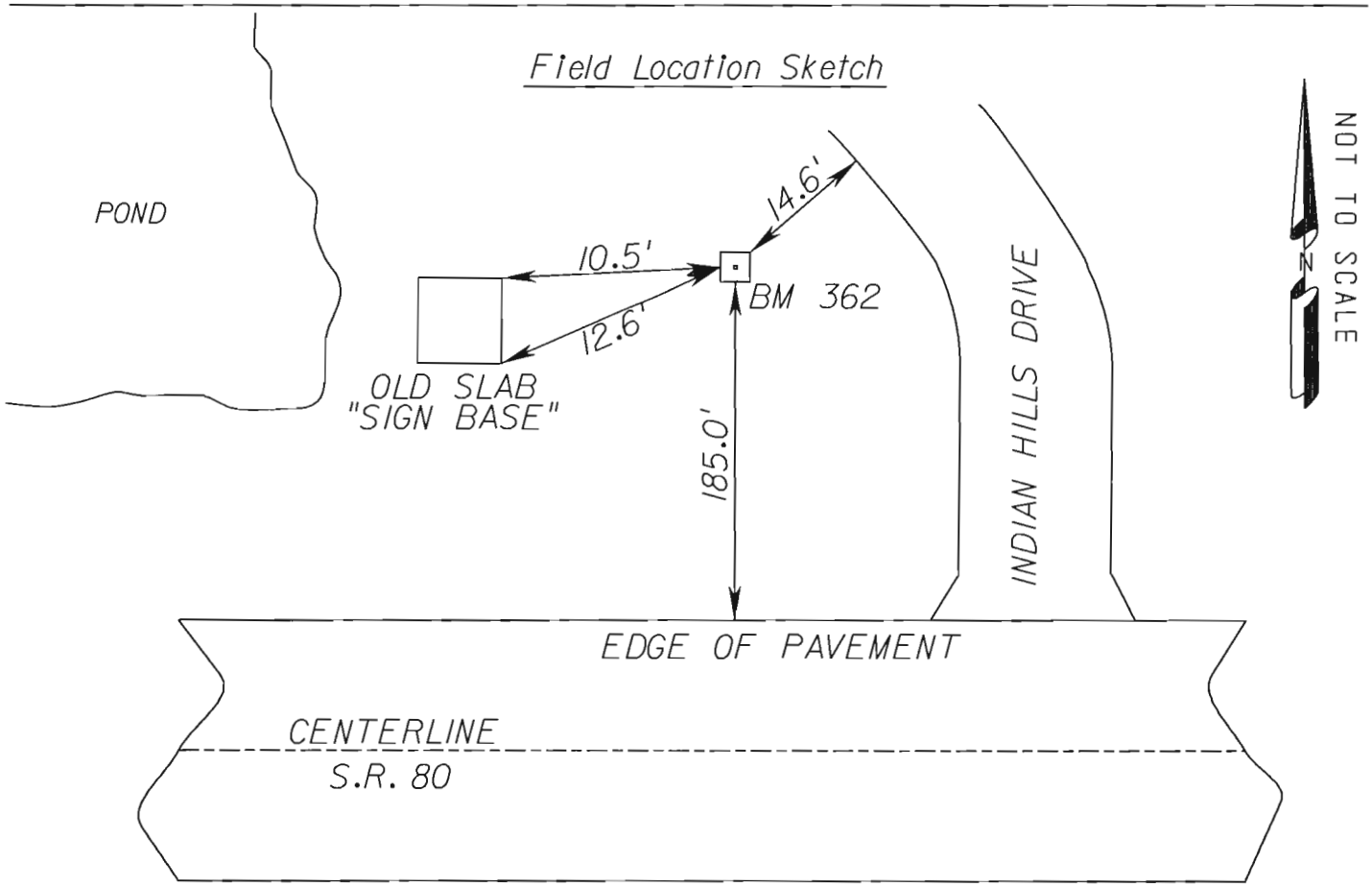

Florida Department of Transportation District One

Vertical Control Data Sheet

DATUM

NGVD 1929 X

NAVD 1988 ___

Monument Name or Designation: BM 363 Elevation feet: 20.153

State Road No.: S.R. 80 County: HENDRY

Section: 3 Township: 43S Range: 31E Roadway Section I.D.: 07010-000

Establishing Firm: AIM ENGINEERING Field Book No.: 502130

Established: / / Recovered: 02 / 09 / 11 Financial Project ID: 408286-5

State Plane Coordinates:
(Nearest Foot) N (Y): = 884866 E (X): = 582948

Base Line Station and Offset: STA. 1197+85 165' RT

Description of Monument: FOUND STANDARD 4"X4" F.D.O.T CONCRETE MONUMENT WITH A BRASS DISK STAMPED BM 363

Distance and Direction from Nearest Intersection: 2.3 MILES EAST ALONG S.R. 80 FROM THE INTERSECTION OF LEXINGTON PARKWAY AND STATE ROAD 80

Field Location Sketch

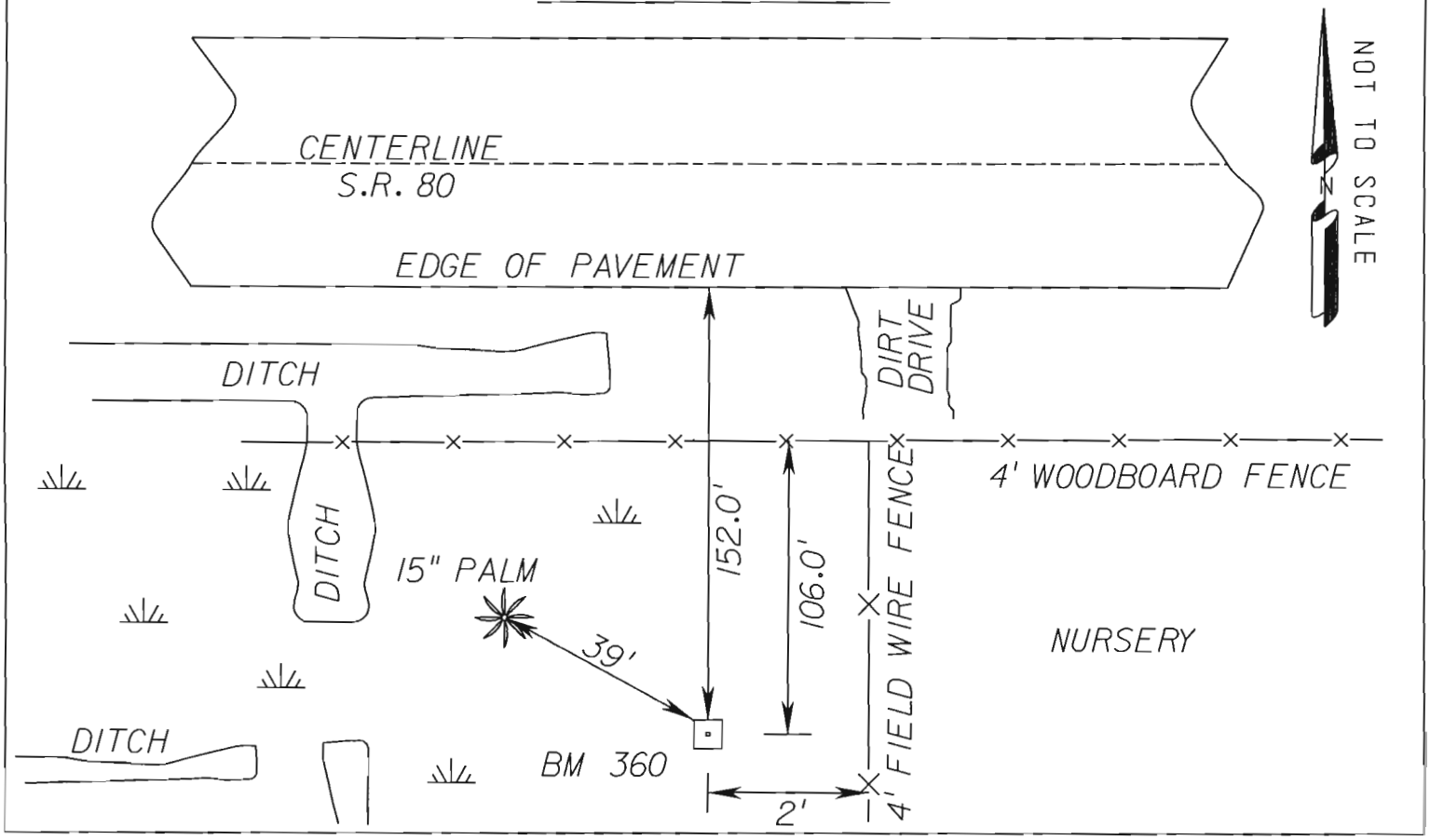

Florida Department of Transportation District One

Vertical Control Data Sheet

DATUM

NGVD 1929 X

NAVD 1988 ___

Monument Name or Designation: BM 364 RESET Elevation feet: 18.561

State Road No.: S.R. 80 County: HENDRY

Section: 3 Township: 43S Range: 31E Roadway Section I.D.: 07010-000

Establishing Firm: HYATT SURVEY SERVICES, INC. Field Book No.: 502130

Established: 02 / 09 / 11 Recovered: / / Financial Project ID: 408286-5

State Plane Coordinates:
(Nearest Foot) N (Y): = 884849 E (X): = 583867

Base Line Station and Offset: STA. 1207+04 181' RT

Description of Monument: SET STANDARD 4"X4" F.D.O.T CONCRETE MONUMENT WITH A BRASS DISK STAMPED BM 364 RESET

Distance and Direction from Nearest Intersection: 2.5 MILES EAST ALONG S.R. 80 FROM THE INTERSECTION OF LEXINGTON PARKWAY AND STATE ROAD 80

Field Location Sketch

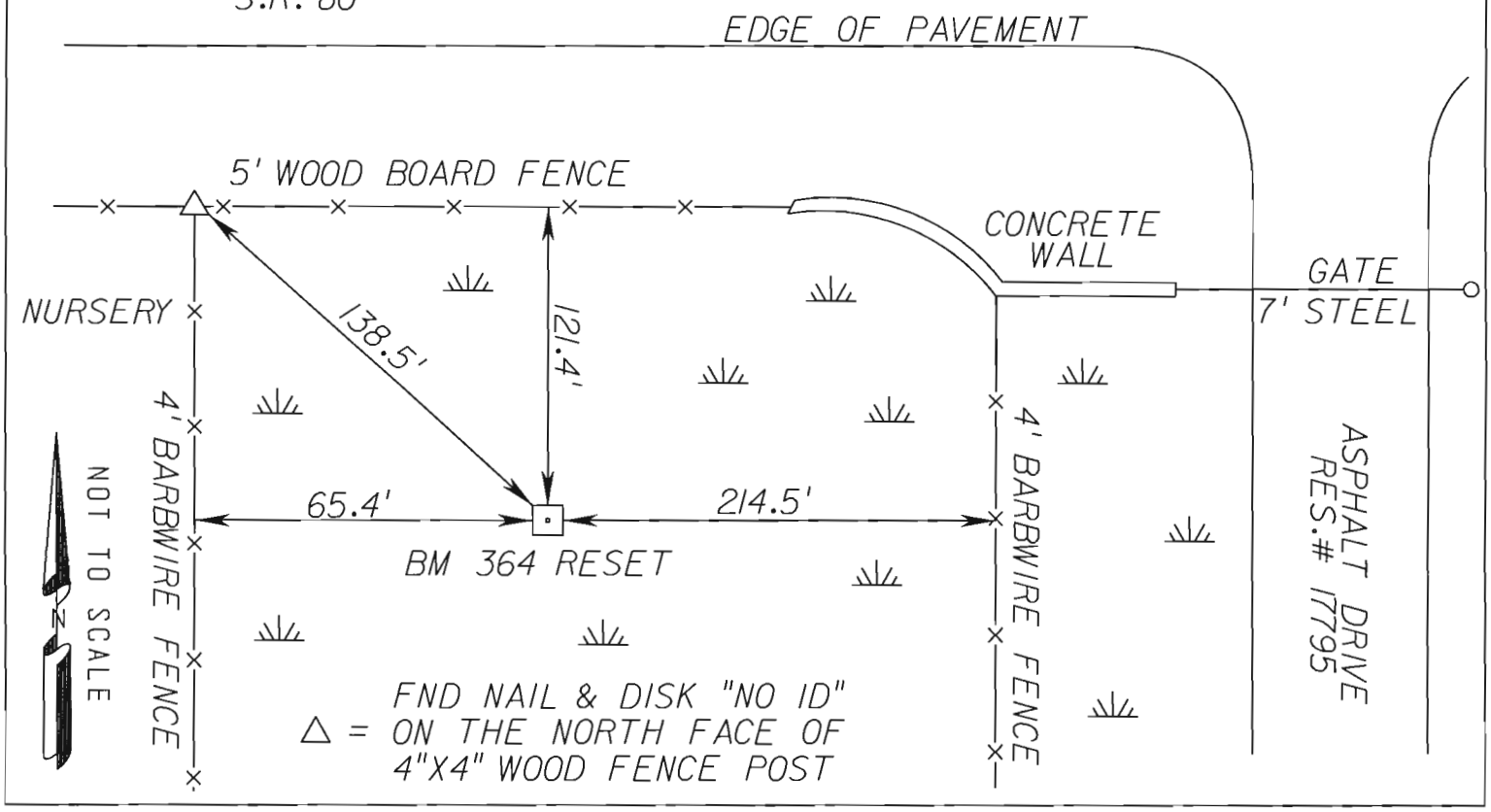

Florida Department of Transportation District One

Vertical Control Data Sheet

DATUM

NGVD 1929 X

NAVD 1988 ___

Monument Name or Designation: BM 365 RESET Elevation feet: 18.311

State Road No.: S.R. 80 County: HENDRY

Section: 3 Township: 43S Range: 31E Roadway Section I.D.: 07010-000

Establishing Firm: HYATT SURVEY SERVICES, INC. Field Book No.: 502130

Established: 02/09 /11 Recovered: / / Financial Project ID: 408286-5

State Plane Coordinates:
(Nearest Foot) N (Y): = 884882 E (X): = 585166

Base Line Station and Offset: STA. 1220+03 146' RT

Description of Monument: SET STANDARD 4"X4" F.D.O.T CONCRETE MONUMENT WITH A BRASS DISK STAMPED BM 365 RESET

Distance and Direction from Nearest Intersection: 2.8 MILES EAST ALONG S.R. 80 FROM THE INTERSECTION OF LEXINGTON PARKWAY AND STATE ROAD 80

Field Location Sketch

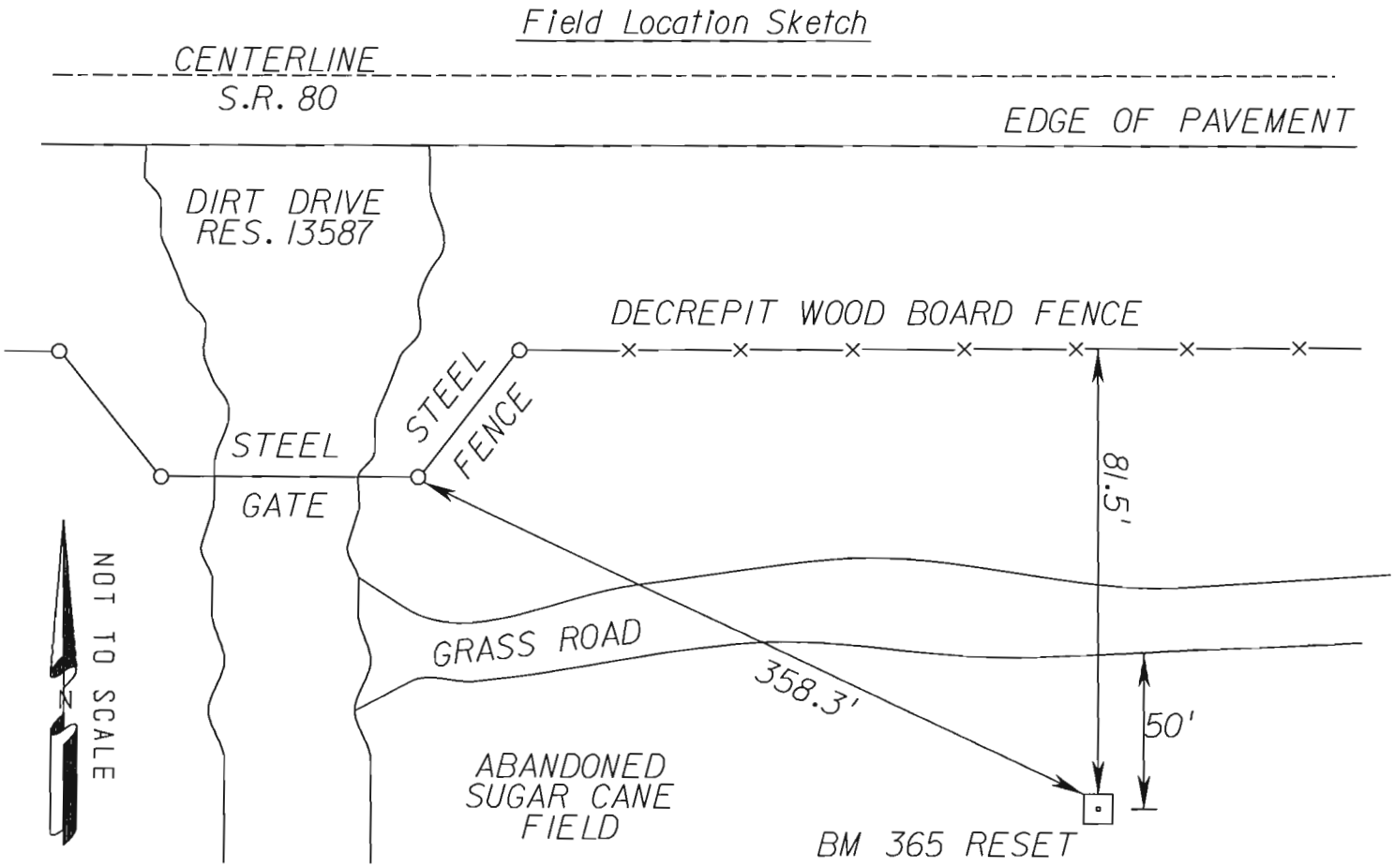

Florida Department of Transportation District One

Vertical Control Data Sheet

DATUM

NGVD 1929 X

NAVD 1988 ___

Monument Name or Designation: P 414 Elevation feet: 18.180

State Road No.: S.R. 80 County: GLADES

Section: 35 Township: 42S Range: 31E Roadway Section I.D.: 07010-000

Establishing Firm: NATIONAL GEODETIC SURVEY Field Book No.: 502130

Established: / / Recovered: 02 / 09 / 11 Financial Project ID: 408286-5

State Plane Coordinates:
(Nearest Foot) N (Y): = 885037 E (X): = 593453

Base Line Station and Offset: N/A

Description of Monument: STAINLESS STEEL ROD IN SLEEVE STAMPED P 414 1992

Distance and Direction from Nearest Intersection: 4.3 MILES EAST ALONG S.R. 80 FROM THE INTERSECTION OF LEXINGTON PARKWAY AND STATE ROAD 80

Field Location Sketch

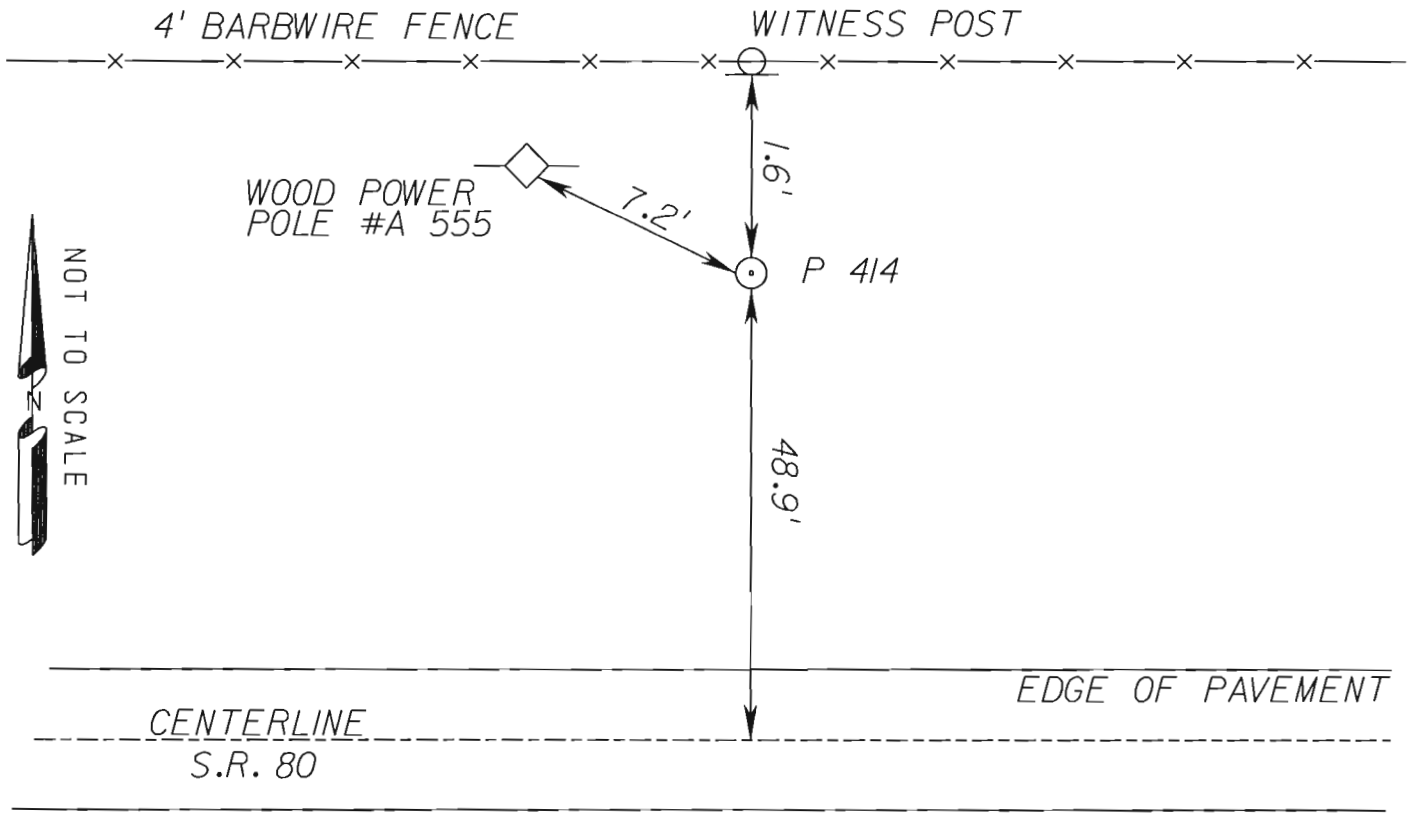

The NGS Data Sheet

See file dsdata.txt for more information about the datasheet.

```
DATABASE =  ,PROGRAM = datasheet, VERSION = 7.85
1        National Geodetic Survey,   Retrieval Date = MARCH 15, 2011
 AD8257 ***********************************************************************
 AD8257  HT_MOD      -  This is a Height Modernization Survey Station.
 AD8257  DESIGNATION -  P 414
 AD8257  PID         -  AD8257
 AD8257  STATE/COUNTY-  FL/GLADES
 AD8257  USGS QUAD   -  LAKE HICPOCHEE (1971)
 AD8257
 AD8257                        *CURRENT SURVEY CONTROL
 AD8257  ___________________________________________________________________
 AD8257* NAD 83(2007)-  26 46 06.29124(N)    081 11 31.94308(W)     ADJUSTED
 AD8257* NAVD 88     -         5.07   (meters)      16.6    (feet)  GPS OBS
 AD8257  ___________________________________________________________________
 AD8257  EPOCH DATE  -        2002.00
 AD8257  X           -     872,551.527 (meters)                     COMP
 AD8257  Y           -  -5,631,273.301 (meters)                     COMP
 AD8257  Z           -   2,855,320.039 (meters)                     COMP
 AD8257  LAPLACE CORR-          -0.65  (seconds)                    DEFLEC09
 AD8257  ELLIP HEIGHT-         -19.411 (meters)          (02/10/07) ADJUSTED
 AD8257  GEOID HEIGHT-         -24.48  (meters)                     GEOID09
 AD8257
 AD8257  ------- Accuracy Estimates (at 95% Confidence Level in cm) --------
 AD8257  Type    PID    Designation                       North   East  Ellip
 AD8257  -------------------------------------------------------------------
 AD8257  NETWORK AD8257 P 414                              2.55   2.98   7.27
 AD8257  -------------------------------------------------------------------
 AD8257
 AD8257.The horizontal coordinates were established by GPS observations
 AD8257.and adjusted by the National Geodetic Survey in February 2007.
 AD8257
 AD8257.The datum tag of NAD 83(2007) is equivalent to NAD 83(NSRS2007).
 AD8257.See National Readjustment for more information.
 AD8257.The horizontal coordinates are valid at the epoch date displayed above.
 AD8257.The epoch date for horizontal control is a decimal equivalence
 AD8257.of Year/Month/Day.
 AD8257
 AD8257.The orthometric height was determined by GPS observations and a
 AD8257.high-resolution geoid model using precise GPS observation and
 AD8257.processing techniques. It supersedes the leveled height previously
 AD8257.determined for this station.
 AD8257
 AD8257.The X, Y, and Z were computed from the position and the ellipsoidal ht.
 AD8257
 AD8257.The Laplace correction was computed from DEFLEC09 derived deflections.
 AD8257
 AD8257.The ellipsoidal height was determined by GPS observations
 AD8257.and is referenced to NAD 83.
 AD8257
 AD8257.The geoid height was determined by GEOID09.
 AD8257
 AD8257;                    North         East     Units Scale Factor Converg.
```

```
AD8257;SPC FL E     -   269,759.904   180,884.752   MT  0.99994569   -0 05 11.6
AD8257;SPC FL E     -   885,037.29    593,452.72   sFT  0.99994569   -0 05 11.6
AD8257;UTM  17      - 2,960,799.845   480,891.274   MT  0.99960451   -0 05 11.6
AD8257
AD8257!             -  Elev Factor  x  Scale Factor =   Combined Factor
AD8257!SPC FL E     -   1.00000305  x   0.99994569  =   0.99994874
AD8257!UTM  17      -   1.00000305  x   0.99960451  =   0.99960756
AD8257
AD8257                          SUPERSEDED SURVEY CONTROL
AD8257
AD8257  NAD 83(1999)-  26 46 06.29140(N)    081 11 31.94325(W) AD(       ) 1
AD8257  ELLIP H (12/12/02)  -19.411  (m)                       GP(       ) 4 1
AD8257  NAVD 88 (09/04/92)    5.142  (m)           16.87   (f) ADJUSTED    1 2
AD8257  NGVD 29 (09/01/92)    5.540  (m)           18.18   (f) ADJUSTED    1 2
AD8257
AD8257.Superseded values are not recommended for survey control.
AD8257.NGS no longer adjusts projects to the NAD 27 or NGVD 29 datums.
AD8257.See file dsdata.txt to determine how the superseded data were derived.
AD8257
AD8257_U.S. NATIONAL GRID SPATIAL ADDRESS: 17RMK8089160799(NAD 83)
AD8257_MARKER: I = METAL ROD
AD8257_SETTING: 49 = STAINLESS STEEL ROD W/O SLEEVE (10 FT.+)
AD8257_SP_SET: STAINLESS STEEL ROD
AD8257_STAMPING: P 414 1992
AD8257_MARK LOGO: NGS
AD8257_PROJECTION: FLUSH
AD8257_MAGNETIC: I = MARKER IS A STEEL ROD
AD8257_STABILITY: B = PROBABLY HOLD POSITION/ELEVATION WELL
AD8257_SATELLITE: THE SITE LOCATION WAS REPORTED AS SUITABLE FOR
AD8257+SATELLITE: SATELLITE OBSERVATIONS - November 19, 2007
AD8257_ROD/PIPE-DEPTH: 6.6  meters
AD8257
AD8257  HISTORY     - Date     Condition        Report By
AD8257  HISTORY     - 1992     MONUMENTED       NGS
AD8257  HISTORY     - 20020518 GOOD             MAPTEC
AD8257  HISTORY     - 20050810 GOOD             INDIV
AD8257  HISTORY     - 20071119 GOOD             NGS
AD8257
AD8257                          STATION DESCRIPTION
AD8257
AD8257'DESCRIBED BY NATIONAL GEODETIC SURVEY 1992
AD8257'24.5 KM (15.20 MI) EASTERLY ALONG STATE HIGHWAY 80 FROM THE COUNTY
AD8257'COURTHOUSE IN LA BELLE, 14.9 M (48.9 FT) NORTH OF THE CENTERLINE OF
AD8257'THE HIGHWAY, 2.2 M (7.2 FT) SOUTHEAST OF UTILITY POLE NUMBER A 555,
AD8257'1.2 M (3.9 FT) BELOW THE LEVEL OF THE HIGHWAY, AND 0.5 M (1.6 FT)
AD8257'SOUTH OF A WITNESS POST AND FENCE.
AD8257
AD8257                          STATION RECOVERY (2002)
AD8257
AD8257'RECOVERY NOTE BY MAPTECH INCORPORATED 2002 (CDP)
AD8257'STATION RECOVERY (2002)
AD8257'RECOVERY NOTE BY MAPTECH, INCORPORATED 2002 (CDP)
AD8257'RECOVERED AS DESCRIBED.
AD8257'
AD8257'
AD8257
AD8257                          STATION RECOVERY (2005)
AD8257
AD8257'RECOVERY NOTE BY INDIVIDUAL CONTRIBUTORS 2005 (CGC)
AD8257'RECOVERED AS DESCRIBED
AD8257
AD8257                          STATION RECOVERY (2007)
AD8257
```